Brand	AXOR
Art. Name	**AXOR ShowerComposition** 2-Jet Shower Module and Shoulder Shower, 1.75 GPM
Art. Nr.	12796001
Product Finish	chrome
Pos.	67

Product Picture

Drawing

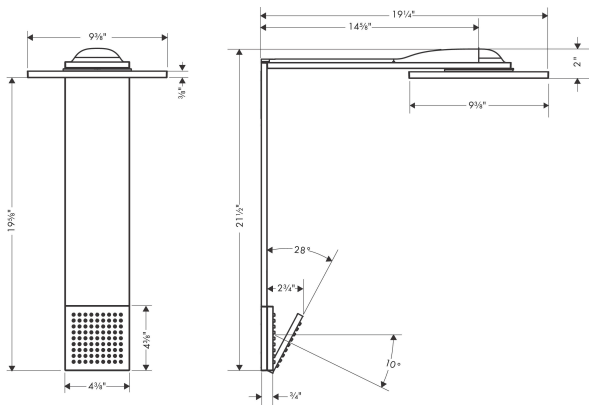

Features

- Shower head size: 9.84" x 9.84"
- Projection: 19.21"
- Spray type overhead shower: PowderRain, Intense PowderRain
- Spraytype shoulder shower: PowderRain
- Flow rate of shoulder shower at 3 bar: 1.75 GPM (6.6 L/Min)
- Flow: 1.75 GPM (6.6 L/Min)
- Shower arm length: 14.56"

Technology

Spray Types