# Axor Montreux

Toilet Brush holder, mirror /Support et brosse WC, Miroir grossissant / Escobilla para WC, Espejo

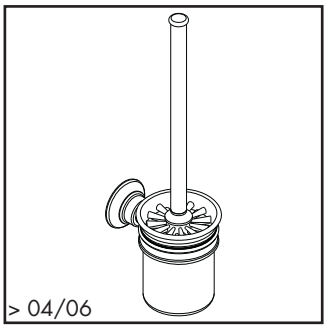


42035XX0

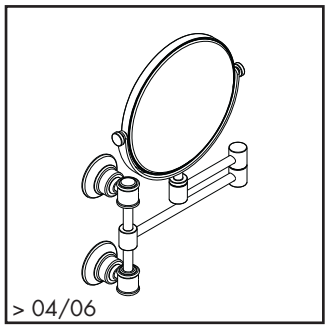


42090XX0

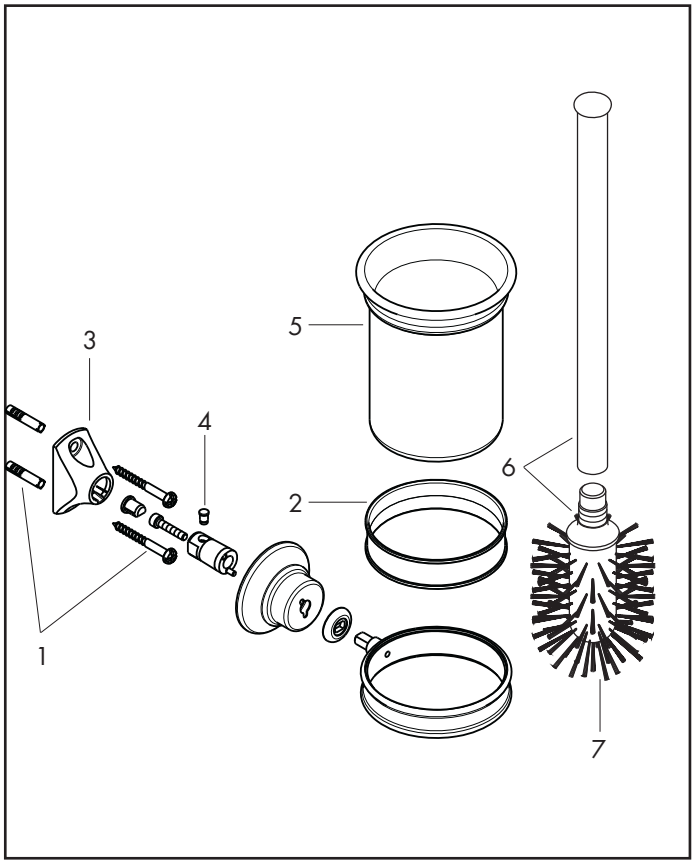


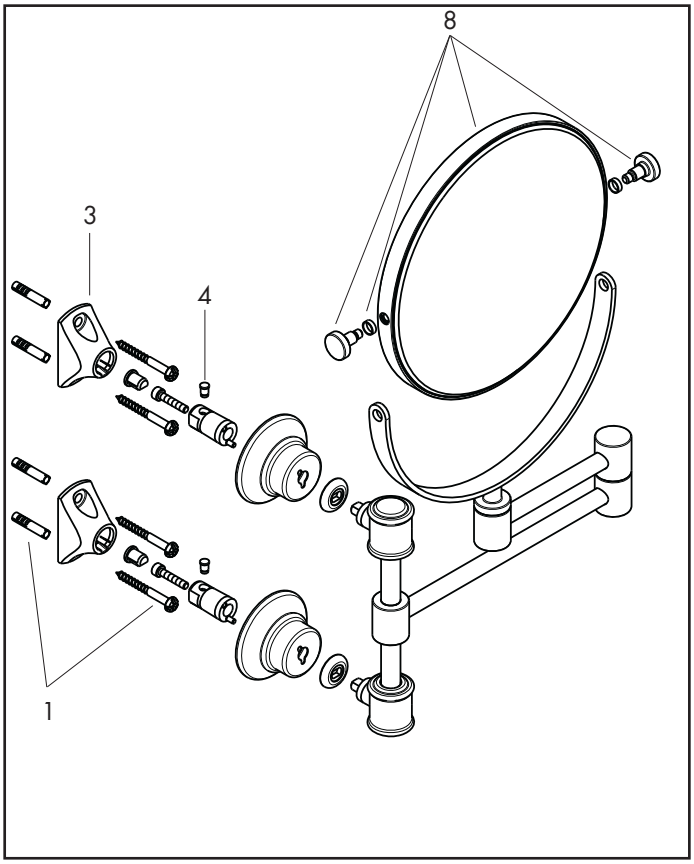


| Pos. | Description | Description | Denominación | Nr./Nr./N° | |
|---|---|---|---|---|---|
| 1 | mounting set | set de fixation | Set de fijación | 40915000 | |
| 2 | plastic ring | anneau plastique | Anillo plástico | 98726000 | |
| 3 | support element | support | Soporte | 96341000 | |
| 4 | pin | goupille | Varilla | 97546000 | |
| 5 | tumbler on its own | récipient brosse à dent | Vaso metálico | 42094000 | |
| 6 | stick with brush | manche avec brosse | Escobilla | 40089XX0 | |
| 7 | toilet brush white | brosse WC blanc | Cepillo blanco | 40088000 | |
| 8 | mirror | miroir | Espejo | 98729XX0 | |



AXOR® hansgrohe

XX = Please see page 1.1 for finish
XX = Description des codes couleur page 1.1
XX = Para el código de acabados ver página 1.1