AXOR

hansgrohe

Brand	AXOR
Art. Name	**AXOR Citterio M** 2-Hole Single-Handle Kitchen Faucet 2-Spray Pull-Down, 1.75 GPM
Art. Nr.	34822341
Surface	brushed black chrome
Pos.	1

Product Picture

Drawing

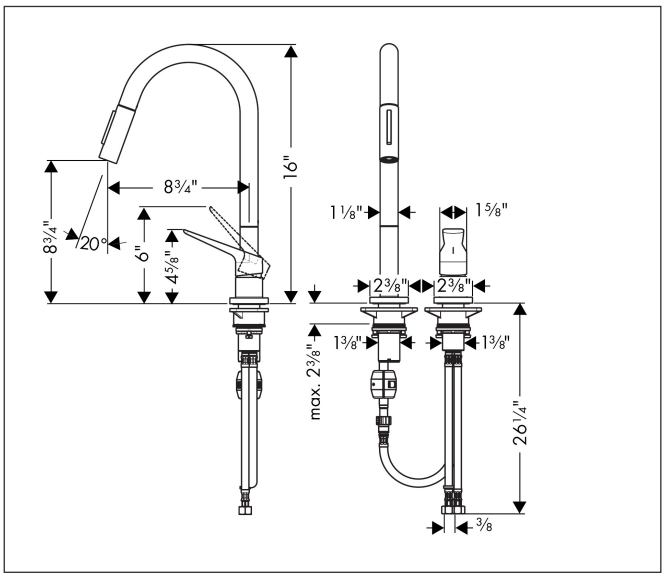

Features

- Projection: 222 mm
- Swivel range 150°
- Laminar spray, Needle spray
- Toggle spray diverter
- MagFit magnetic sprayhead docking
- Freestanding installation 2-hole
- Flow: 1.75 GPM (6.6 L/Min)
- Ceramic cartridge
- ⅜" connections
- Integrated double backflow prevention
- Extension length Up to 30" (50cm)

Technology

Spray Types