Avallon®

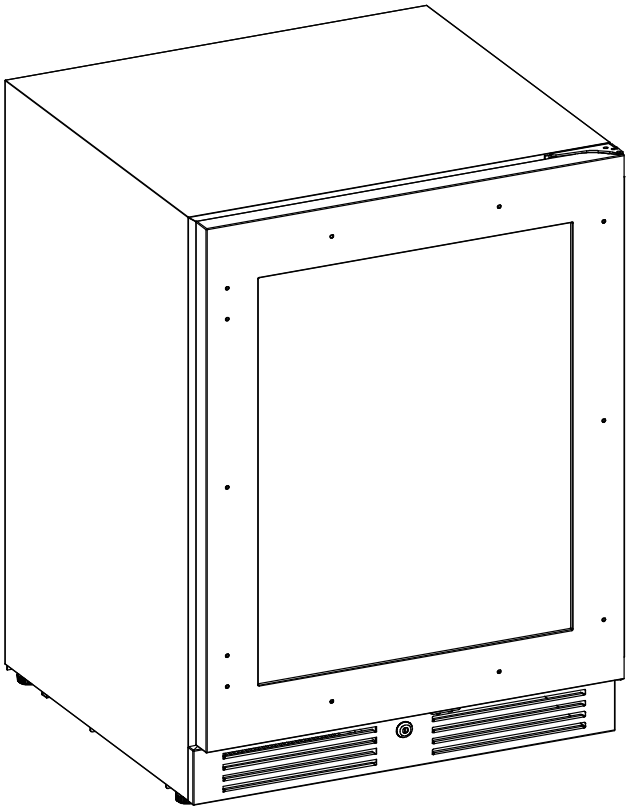

Owner's Manual

24 Inch Undercounter Dual Zone Series

Model: AWC24PG2A2A

AVALLON.COM

Important Safety Information

Improper handling can cause serious damage to the Avallon refrigerator and / or injury to the user. This refrigerator is designed for domestic indoor use only. Do not use the unit for industrial or commercial use. Any other use may invalidate the warranty. Please review the rating label located inside and on the rear panel of the unit for electrical and other technical data related to this unit. The unit must be used with a properly grounded wall outlet.

Please read and follow the safety information listed below to reduce the risk of fire, electric shock, or injury.

Electrical Safety

- Do not exceed the power outlet ratings.
- It is recommended the refrigerator be connected on its own circuit.
- The unit must be installed in accordance with state and local electrical codes.
- A standard electrical supply (115 V, 60Hz), that is properly grounded in accordance with the National Electrical Code and local codes and ordinances is required.
- Use outlets that cannot be turned off by a switch or pull chain.
- Always turn the unit off and unplug it from the outlet when cleaning.
- Unplug the unit if it is not going to be used for an extended period of time.
- Do not operate the unit with a power plug missing the ground plug, a damaged cord, or a loose socket.
- Be sure the refrigerator is properly grounded.
- Never plug or unplug the unit with wet hands.
- Do not bypass, cut, or remove the grounding plug.
- Do not use extension cords or power strips with this unit. You may need to contact your electrician if it is necessary to use a longer cord or if you do not have a grounded outlet. Do not modify the power cord's length or share the outlet with other appliances.
- Do not start or stop the unit by switching the circuit's power on and off.
- If the power cord is damaged, it must be replaced by the manufacturer or a qualified technician.
- Never repair the unit while it is plugged in.
- Immediately unplug the unit if it makes strange sounds, emits smells, or smoke comes out of it, and contact customer service.
- Do not remove any part of the casing unless you are instructed to do so by an authorized technician.
- You should never attempt to repair the unit yourself.
- Contact customer service for service options if the unit needs service.

Warning: Flammable Refrigerant Used! When handling, moving, and using the refrigerator, make sure to avoid either damaging the refrigerant tubing or increasing the risk of a leak.

Warning: When positioning the appliance, ensure the supply cord is not trapped or damaged.

Warning: Do not put multple portable socket-outlets or portable power supplies at the rear of the appliance.

©2026 Ferguson Enterprises, LLC V1.0-07072026

General Safety

- To prevent injuries, use at least two (2) people to move and install the refrigerator.
- This appliance is not intended for use by persons, including children, with reduced physical, sensory or mental capabilities, unless they have been given supervision or instruction concerning the use of the appliance by the person(s) responsible for their safety.
- Install the refrigerator in a well-ventilated area where the ambient temperature is above 50°F and below 90°F.
- The temperature range for this refrigerator is optimized for perishable food items.
- Do not place hot or warm items into the refrigerator before they cool down to room temperature.
- This unit is designed to be installed indoors, and protected from rain, sleet, snow, and / or moisture.
- This unit is not intended to be used by children.
- Children should be supervised to ensure that they do not play with this product.
- Never allow children to crawl inside the refrigerator. If you are disposing of the unit, remove the door.
- Do not use this appliance near flammable gas or combustibles such as gasoline, benzene, or thinner.
- Do not store explosive substances such as aerosol cans with a flammable propellant in this appliance.
- Do not place the unit near heat sources such as ovens, grills, or direct sunlight.
- Only use in an upright position on a flat, level surface and provide proper ventilation.
- Do not pinch or kink the power supply line between the unit and cabinet.
- Do not leave any cleaning solutions in the unit.
- Do not use solvent-based cleaning agents or abrasive solutions to clean the unit as they may damage the interior and exterior.
- Do not place any other appliances on top of the unit.
- Do not turn the unit upside down, on its side, or at an angle off level.
- If your model of refrigerator is equipped with a lock, keep the keys away from children.
- Do not move the unit without emptying the contents and securing the door in a closed position.
- This appliance is meant for use in the household or similar settings.
- Keep all ventilation openings clear of obstruction.
- Do not use mechanical devices or other means to accelerate the defrosting process.
- Do not damage the refrigerant circuit.
- Do not use other appliances inside the refrigerator unless recommended by the manufacturer.
- If the supply cord is damaged, it must be replaced by the manufacturer, its service agent, or a similarly qualified individual.

Warning: Risk of child entrapment. Before you throw away your old refrigerator or freezer, take off the doors and leave the shelves in place so that children may not easily climb inside.

©2026 Ferguson Enterprises, LLC V1.0-07072026

Table of Contents

Important Safety Information....2
First-Time Operating Instructions....5
Introduction....5
Parts Identification....6
Installation....8
- Unpacking the Refrigerator....8
- Types of Installation....8
- Installation Clearance Requirements....9
- Electrical Requirements....10
- Recommended Grounding Method....10
- Leveling the Refrigerator....11
- Installing the Door Handle....11
- Reversing The Door....12
- Installing the Wine Shelves....13
- Removing the Wine Shelves....13

Operation....14
- Installation Checklist before Operation....14
- Using the Temperature Control Panel....14
- Internal Light....15
- Normal Sounds....16
- Temperature Alarm....16
- Door Ajar Alarm....16
- Defrosting....16
- Preparing the Refrigerator for Storage....17

Cleaning and Maintenance....17
Troubleshooting....18
Specifications....20
Product Warranty....21

©2026 Ferguson Enterprises, LLC V1.0-07072026

First-Time Operating Instructions

Before use, make sure all packaging labels and materials are removed from the unit. Be sure to keep track of all included parts and pieces before discarding the packaging materials. It is advised that you keep the original box and packaging materials in case you ever need to move or ship the appliance in the future.

Let the unit stand for at least 24 hours before you use it; this allows the cooling components time to settle from transit. The instruction manual should be read before use.

Introduction

Thank you for purchasing this Avallon refrigerator. We hope that this purchase will be the beginning of a lasting and rewarding relationship between you and Avallon. We will provide the customer support and exemplary products necessary to nurture that relationship.
This manual contains important information regarding the proper installation, use, and maintenance of your refrigerator. Following this manual will ensure that your product will work at its peak performance and efficiency.

Please save the original product packaging in case you need to safely transport your refrigerator.

For Your Records:
Please write down the model number and serial number below for future reference. Both numbers are located on the ratings label on the inside and back of your unit and are needed to obtain warranty service. You may also want to staple your receipt to this manual as it is the proof of your purchase, and is also needed for service under your warranty.

Model Number: _____

Serial Number: _____

Date of Purchase: _____

For a more efficient experience, please do the following before contacting customer service:

- If you received a damaged product, immediately contact the retailer or dealer that sold you the product.
- Read and follow this instruction manual carefully to help you install, use, and maintain your refrigerator.
- Read the troubleshooting section of this manual as it will help you diagnose and solve common issues.
- Visit us on the web at www.avallon.com to register your product, download product guides, and access additional troubleshooting resources and up-to-date information.
- If you need warranty service, customer service representatives are available via email at service@avallon.com.

©2026 Ferguson Enterprises, LLC V1.0-07072026

Parts Identification

Full View:

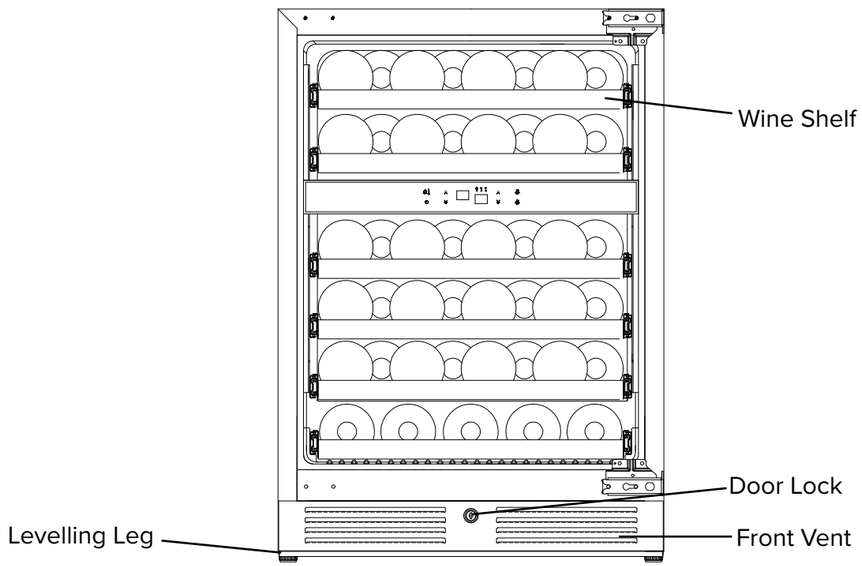

Empty View:

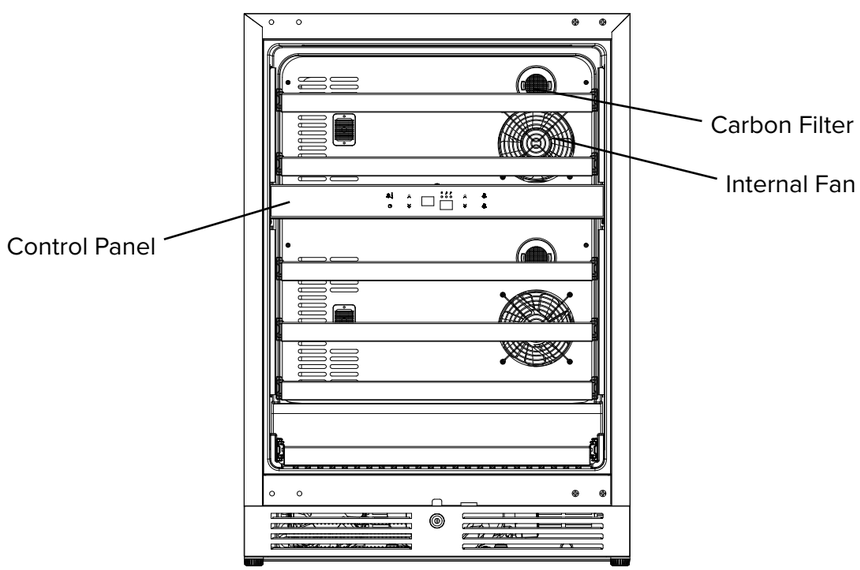

©2026 Ferguson Enterprises, LLC V1.0-07072026

Back View:

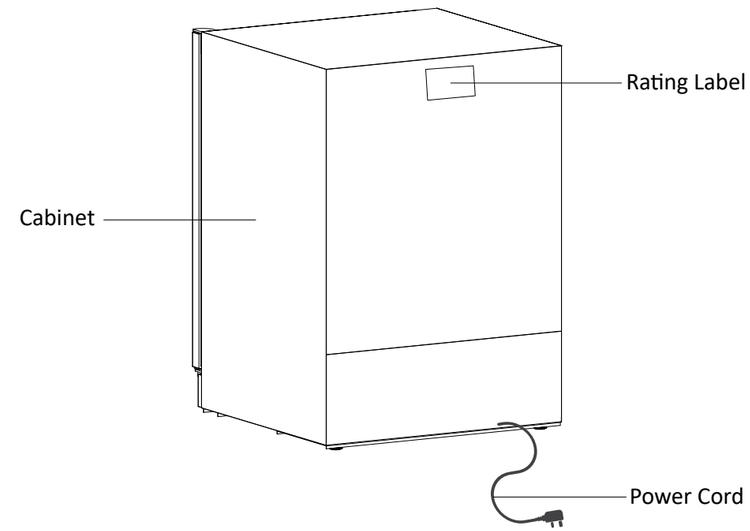

Carbon Filter:

A built-in carbon filter protects your contents by acting as a natural barrier against harmful odors.

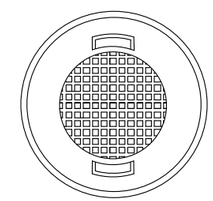

Internal Fan:

This is an air-cooled unit equipped with an internal fan that maintains a consistent internal temperature.

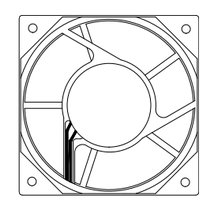

Note: The carbon filter should be replaced every three to six (3 - 6) months depending on the unit's exposure level to odor. If the unit is placed in the kitchen, regular replacement every three (3) months is ideal.

©2026 Ferguson Enterprises, LLC V1.0-07072026

Installation

The refrigerator should be installed in accordance with local electrical code requirements. The refrigerator should also be placed in a location that is strong enough to support its total weight, keeping in mind that it will weigh substantially more when fully loaded than when empty. Before you plug the refrigerator into a power supply, be sure to let it stand upright for at least 24 hours to allow the compressor's oils to settle.

Unpacking the Refrigerator

Warning: Use two (2) or more people to move and install the refrigerator. Failure to do so can result in back or other injury. Carefully remove the packaging materials. Remove any shipping tape and glue from your refrigerator before use. Do not use sharp instruments, rubbing alcohol, flammable fluids, or abrasive cleaners to remove tape or glue. These products can damage the surface of your refrigerator.

Warning: Do not remove any safety, warning, or product information labels from your refrigerator.

Types of Installation

This refrigerator has been designed for freestanding or built-in installation. In each case, there must be adequate ventilation and access for service.

Freestanding Installation:

A freestanding installation will allow you to install the refrigerator in almost any place you desire. You must follow the stated instructions for electrical requirements and leveling the refrigerator.

Built-in Installation:

A built-in installation will allow you to install the refrigerator under a counter as long as the required clearance space around the refrigerator is provided. It is necessary to allow adequate ventilation space around the unit, including at the back of the unit.

The following additional items must be observed:

1. Place the refrigerator in front of the installation location. Adjust the feet and place the unit flat on the floor or on a platform depending on your installation requirements.
2. If the electrical outlet for the refrigerator is behind the cabinet, plug in the refrigerator.
3. Push the refrigerator into position.

Warning: DO NOT install the refrigerator behind a closed cabinet door.

©2026 Ferguson Enterprises, LLC V1.0-07072026

Installation Clearance Requirements

When installing the refrigerator under a counter, follow the recommended spacing dimensions shown.

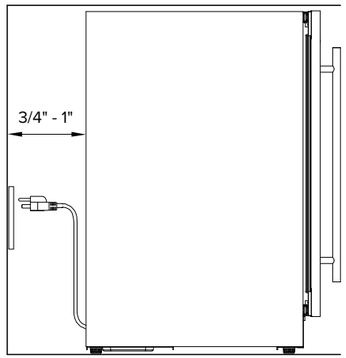

- To ensure proper service access and ventilation, allow at least between 3/4 – 1 inch of clearance at the back as shown in the diagram.
- The installation should allow the unit to be pulled forward for servicing, if necessary.
- A standard electrical supply (115 VAC only, 60 Hz), properly grounded in accordance with National Electrical Code and local codes and ordinances, is required.

Note: The refrigerator should be installed on a firm and level surface that will be able to support the entire weight of a fully loaded unit. It is important for the refrigerator to be level in order to work properly. If needed, you can adjust the height of the refrigerator by rotating the feet. See the "Leveling the Refrigerator" section.

Note: A standard electrical supply (115 VAC only, 60 Hz), properly grounded in accordance with National Electrical Code and local codes and ordinances, is required.

©2026 Ferguson Enterprises, LLC V1.0-07072026

Electrical Requirements

ELECTRIC SHOCK HAZARD!

- Plug into a grounded 3-prong outlet.
- Never remove the grounding prong from the plug.
- Never use an adapter to bypass the grounding prong.
- DO NOT use an extension cord.
- Failure to follow these instructions can result in fire, electrical shock, or death.

Before you move your refrigerator into its final location, it is important to make sure you have the proper electrical connection:

- A standard electrical supply (115 V, 60Hz), properly grounded in accordance with the National Electrical Code and local codes and ordinances, is required.
- It is recommended that a separate circuit, serving only your refrigerator, be provided. Use receptacles that cannot be turned off by a switch or pull chain.
- The fuse (or circuit breaker) size should be 15 Amps.

Recommended Grounding Method

For your personal safety, this appliance must be grounded. It is equipped with a power supply cord that has a 3-pronged grounding plug.

To minimize possible shock hazard, the cord must be plugged into a mating 3-pronged wall socket, and grounded in accordance with the National Electrical Code and local codes and ordinances. If a mating wall socket is not available, it is the personal responsibility of the customer to have a properly grounded, 3-prong wall receptacle installed by a qualified electrician.

©2026 Ferguson Enterprises, LLC V1.0-07072026

Leveling the Refrigerator

The refrigerator should be installed on a firm and level surface that will be able to support the entire weight of a fully loaded unit. It is important for the refrigerator to be leveled in order to work properly.

It can be raised or lowered by rotating the plastic sheaths around each of the feet on the bottom of the machine. If you find that the surface is not level, rotate the feet until the refrigerator becomes level. You may need to make several adjustments to level it. We recommend using a carpenter's level to check the machine.

Turn the leveling feet to the right to lower that side of the refrigerator. Turn the leveling feet to the left to raise that side of the refrigerator.

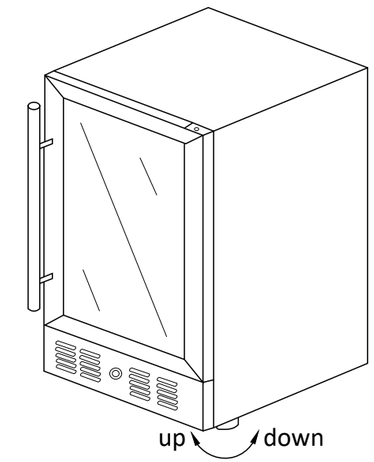

Important: Once you are ready to install the unit in a cabinet or directly on the floor, you must adjust the feet to level the refrigerator.

Installing the Door Handle

To install the door handle:

1. Open the door and carefully pull the door gasket around the area where the handle is to be installed.
2. Insert each Phillips head screw through the gasket side of the door until the screw passes through the door.
3. Align the handle with the screws and tighten using a Phillips head screwdriver until the handle is flush against the door frame.
4. Carefully press the door gasket into its original position.

Caution: Do not over-tighten the screws as this may cause damage to the handle or to the door.

Note: Panel ready models allow for the installation of handles which may be affixed to the panel overlay directly. Door handle installation may be different than the above instructions. Please visit www.avallon.com for additional panel ready information.

©2026 Ferguson Enterprises, LLC V1.0-07072026

Reversing The Door

If you wish to change the opening direction of the door, please follow the steps below. At least two people are needed to safely reverse the door direction.

1. Open the door, loosen the screws (**A**) securing the hinges to the top and bottom of the right side (leave them semi-loose), and remove the door (**B**).

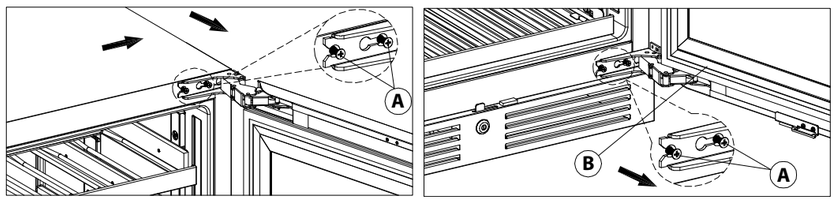

2. Remove the door hinge screws (**A**).

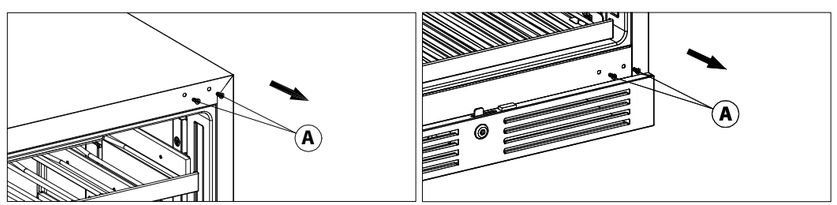

3. Remove the four decorative screws (**C**) from the top-left and bottom-left corners of the product, and install them in the top-right and bottom-right corners.

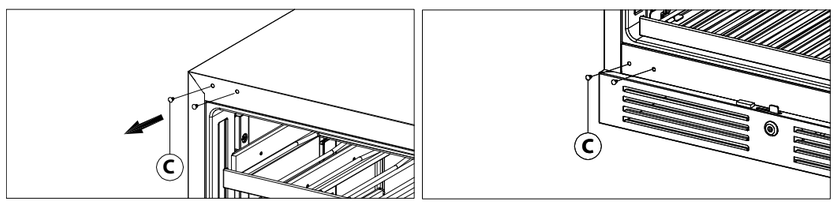

4. On the bottom of the door, remove the magnet/child safety lock (**D**) and the two screws securing it, then reinstall on the opposite side of the door.

5. Install the hinge screws (**A**) halfway to the top left and bottom, then lift the door to clip the hinges onto the screws, and then fully tighten the hinge screws (**A**).

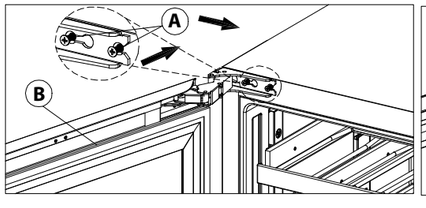

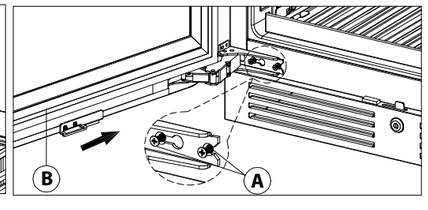

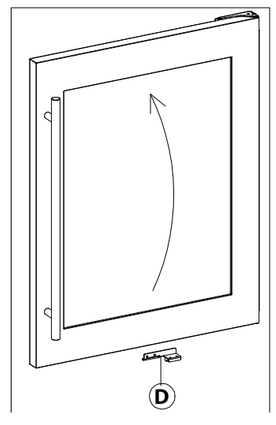

©2026 Ferguson Enterprises, LLC V1.0-07072026

Installing the Wine Shelves

1. Open the door completely.
2. Line up the shelf notches with the rail posts on both the right and left sides.
3. Push the shelf down and then push it all the way inwards until the shelf fully rests inside of the unit and you are able to close the door.
4. The shelf should glide smoothly back and forth. If it does not, you may need to remove it and start over.

Removing the Wine Shelves

1. Open the door completely.
2. Remove all of the contents loaded on the shelf, if applicable.
3. Line up the shelf notches with the rail posts as indicated below. This will require you to hold on to both rails as you move the shelf to line up the posts with the notches on both sides of the shelf.
4. Evenly lift the shelf up and then pull the shelf out.

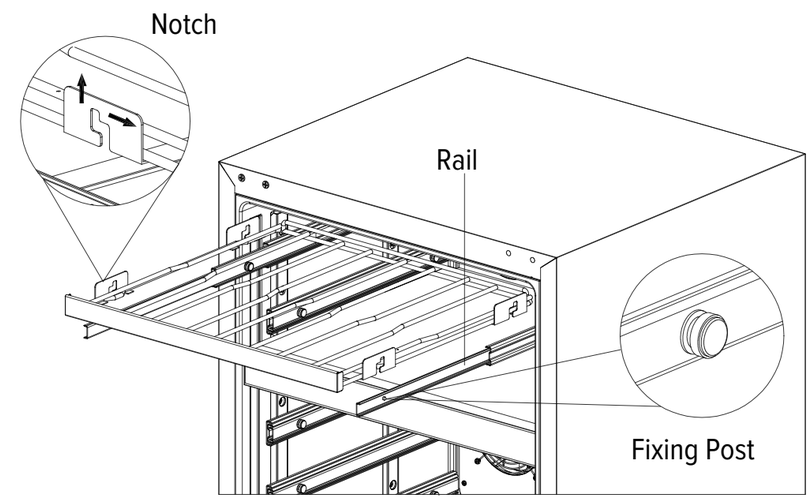

©2026 Ferguson Enterprises, LLC V1.0-07072026

Operation

Installation Checklist before Operation

1. Have all packing materials and tape been removed from the interior and exterior of the refrigerator?
2. Have the installation instructions been followed, including connecting the machine to electricity? And has proper grounding been installed for the refrigerator?
3. Has the machine been leveled?
4. Is the refrigerator in a site where the ambient temperature is between 50°F and 90°F all year round?
5. Is there a clearance of at least 3/4-1” at the rear?

Using the Temperature Control Panel

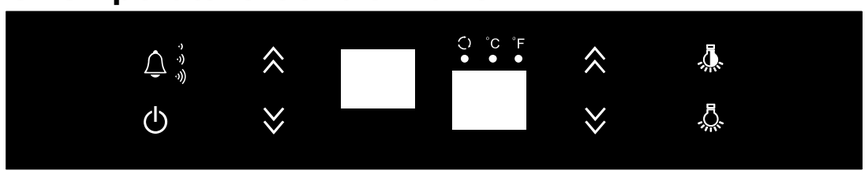

This wine refrigerator has two temperature zones each with a temperature range from 39°F to 65°F. The temperature reading on the left displays the upper zone. The temperature reading on the right displays the lower zone.

POWER BUTTON
Press and hold this button down for two seconds to power your unit on. Once pressed, the “Run” indicator light will illuminate to indicate the unit is on and running. Press and hold this button for two seconds again and the unit will power off and the “Run” indicator light will turn off.

ADJUST ALARM VOLUME
Press this button to cycle between four different volume levels (b0--b1--b2--b3) for the alarm. b0=silent. b3=default.

INCREASE TEMPERATURE
Press this button to increase the temperature by one degree increments. 65°F is the highest available temperature.

DECREASE TEMPERATURE
Press this button to decrease the temperature by one degree increments.
The lowest available temperature will be either 34°F or 39°F, depending on your refrigerator.

INTERIOR LIGHT
Lightly press this button to cycle between the three interior light colors of your refrigerator: white, blue, and amber. Press and hold this button for three (3) seconds to switch between Automatic light mode (LF) and Display light mode (LP), which are covered on the following page.

ADJUST LIGHT BRIGHTNESS
Press this button to cycle between five different brightness levels.

NOTE: To switch between Fahrenheit and Celsius, press the increase/decrease temperature (either side) buttons together for three seconds.

©2026 Ferguson Enterprises, LLC V1.0-07072026

Internal Light

This refrigerator is equipped with top and side internal lights that can be set to a blue, white, or amber color. You can choose to display each color of light in two different modes: Automatic Light Mode and Display Light Mode.

Automatic Light Mode:

The internal lights will illuminate each time the door is opened and fade off once the door is closed. This feature is triggered by a sensor located on the front vent. This sensor allows the refrigerator to recognize when the door is open or closed.

Display Light Mode:

The internal lights will stay constantly illuminated whether the door is open or closed.
The light gradually brightens to full intensity when the door opens, and dims down to the preset brightness when the door closes.

NOTE: We run test every unit that we produce in our factory. Because of this, your model may default to any of the above colors out of the box. Simply cycle through until you reach your desired internal light color.

©2026 Ferguson Enterprises, LLC V1.0-07072026

Normal Sounds

Your new refrigerator may make noise during normal operation. Most of these sounds are normal. Hard surfaces like the floor and walls can make the sounds seem louder than they actually are.

The following describes several sounds you may hear and what may be making them:

- Rattling noises may come from the flow of the refrigerant or the water line. Items stored on top of the refrigerator can also make noises.
- The high efficiency compressor may make a pulsating or high-pitched sound.
- Water running from the evaporator to the water bin may make a splashing sound.
- As each cycle ends, you may hear a gurgling sound due to the refrigerant flowing in your refrigerator.
- You may hear air being forced over the condenser by the condenser fan.

Temperature Alarm

If the interior temperature is higher than 73°F (23°C), “HI” is shown on the temperature control panel and the temperature alarm will sound continuously after one (1) hour. This indicates that the inner temperature is too high. If the inner temperature is lower than 30°F (-1°C), “LO” is shown on the temperature display panel and the temperature alarm will sound continuously after fifteen minutes. If one of these situations occurs please reference the troubleshooting section found in this manual or contact Avallon for support.

Door Ajar Alarm

This refrigerator includes a door ajar alarm, which will sound if the door is open for more than three (3) minutes. Leaving the door open for extended periods of time will cause poor cooling performance and may shorten the life of the refrigerator. Keep the door closed as much as possible.

Defrosting

Note that under most refrigerating settings, the unit will automatically defrost under most ambient conditions. However, on colder settings, some frost may build up. Additionally, the more humid the ambient conditions, the more frost may build up. Keep the door closed as much as possible and avoid opening the door unnecessarily to minimize frost build-up.

If frost is preventing the door from closing properly, you may need to power the unit off until the frost melts. Use a soft absorbent towel to dry the unit.

⚠ **Warning**: Never attempt to remove frost with a sharp object!

©2026 Ferguson Enterprises, LLC V1.0-07072026

Preparing the Refrigerator for Storage

If the refrigerator will not be used for a long time, or is to be moved to another place, it will be necessary to defrost the unit and dry the interior.

1. Disconnect the refrigerator from the power supply by removing the power plug from the wall socket.
2. Leave the door open to allow for air circulation and to prevent mold, mildew, and unpleasant smells.
3. Once the interior is dry and clean the unit will be ready for storage.

⚠ **Caution**: Store the unit out of reach from children. If you have children, you may want to take additional precautions such as removing the door to prevent a child from being trapped inside the refrigerator.

⚠ **Important**:
• Do not touch the power plug when your hands are wet.
• Never unplug the unit by pulling on the cord.

Cleaning and Maintenance

Periodic cleaning and proper maintenance will ensure efficiency, top performance, and long life.

Exterior Cleaning

The door and cabinet may be cleaned with a mild detergent and lukewarm water solution such as two (2) tablespoons of baking soda to one (1) quart of water.

Do not use solvent based or abrasive cleaners. Use a soft sponge and rinse with clean water. Wipe with a soft clean towel to prevent water spotting.

Interior Cleaning

The refrigerator’s interior should be cleaned occasionally.

1. Disconnect power to the unit.
2. Open the door and remove the contents and shelves.
3. Wait until the unit defrosts.
4. With a clean cloth, wipe down the interior of the unit.
5. Reinsert the shelves and contents.
6. Reconnect power to the unit.

©2026 Ferguson Enterprises, LLC V1.0-07072026

Troubleshooting

Before Calling for Help:

If the unit appears to be malfunctioning, read through the “Operation” section of this manual first. If the problem persists, check the Troubleshooting Guide below and on the following page. The problem may be something that can easily be solved or explained.

Symptoms	Possible Causes	Solutions
The refrigerator turns on and off frequently.	The room temperature is higher than the recommended ambient environment.	Run the refrigerator at the appropriate ambient temperature.
	The door is being opened too often.	Minimize the number of times the door is opened.
	The door is not completely closed.	Make sure the door is completely closed.
	The door gasket is not sealing properly.	Make sure the door gasket is sealing properly.
	The refrigerator does not have the suggested ventilation.	Read and follow the “Installation Clearance Requirements” section.
The refrigerator does not turn on.	There is a power failure.	Ensure that the refrigerator is plugged in and the power outlet has power.
	The refrigerator is not plugged in.	Plug the unit in to a power outlet that has sufficient amperage.
	A house fuse has blown or the circuit breaker is tripped.	Replace the broken fuse in your fuse box or reset the breaker.
The refrigerator will not reach the desired temperature.	The refrigerator is placed too close to a heat source.	Keep the refrigerator away from direct sunlight or other heat sources.
	The refrigerator does not have sufficient ventilation.	Read and follow the “Installation Clearance Requirements” section.
	The door is opened too frequently or for a long period of time.	Close the door tightly and do not open the door too frequently or for a long period of time.

©2026 Ferguson Enterprises, LLC V1.0-07072026

Symptoms	Possible Causes	Solutions
The refrigerator is making strange noises.	Certain sounds are normal.	Read the “Normal Sounds” section.
	The unit is not level or is touching another appliance.	Check to make sure that the refrigerator is level, and that it is not in contact with another appliance or furniture.
The body of the refrigerator is electrified.	The unit is not grounded properly.	Contact your local electrician to test your electrical grounding system.
Frost is forming in the refrigerator.	The environment is humid.	Though the unit uses an “auto-defrost” system, under certain conditions, manual defrosting may be required. If frost builds up, you can try running the refrigerator on a warmer temperature setting, minimizing the number of times you open the door, or unplugging the unit to allow the frost to melt.
	The ambient temperature is too low.	Move the refrigerator to a site with an ambient temperature at or above 50°F.
	The door is being opened too frequently.	Close the door tightly and do not open the door too frequently or for a long period of time.
The door will not shut properly.	The refrigerator is not level.	Make sure the refrigerator is on a level surface.
	The door gasket is dirty.	Clean the door gasket.
	The door gasket is not installed correctly.	Make sure the door gasket is correctly installed.
	The shelves are incorrectly installed.	Install the shelves correctly.

©2026 Ferguson Enterprises, LLC V1.0-07072026

Specifications

Note: Technical data and performance information are provided for reference only. Specifications are subject to change. Check the rating label on the refrigerator for the most accurate information.

PRODUCT TYPE	24 Inch Undercounter Dual Zone Series
MODEL NUMBER	AWC24PG2A2A
VOLTAGE / FREQUENCY	AC 115V~60Hz
AMPERAGE	1.7A
COLOR	Black Cabinet with Panel Ready Door
REFRIGERANT	R600a, 1.41 oz. (40g)
TEMPERATURE RANGE	39°F - 65°F
DIMENSIONS (HEIGHT X WIDTH X DEPTH)	34” X 23-13/16” X 23-1/16”

Note: Product depth with handle is 25”

©2026 Ferguson Enterprises, LLC V1.0-07072026

Product Warranty

Warranty Period	Avallon will be responsible for:	Consumer will be responsible for:
1st - 2nd year	All costs for repairing or replacing parts and/or unit which proves to be defective.	
Limited 2nd - 5th year (compressor only)	Repairing or replacing any compressor which proves to be defective. (Labor not included.)	Labor and all transportation costs.

This product is warranted by Avallon and is subject to any conditions set forth as follows:

WHAT IS COVERED:

Two Years Parts and Labor: For two years from the date of original retail purchase, Avallon will repair or replace any part free of charge including labor that fails due to a defect in materials or workmanship. Labor will be performed free of charge at an authorized Avallon repair facility and Avallon will supply new, rebuilt, or refurbished parts free of charge. Avallon may request a defective part be returned in exchange for the replacement part. After the 24-month period, Avallon will no longer be responsible for labor charges incurred or replacement parts. All defective products and parts covered by this warranty will be repaired or replaced on a mail-in basis to an Avallon authorized repair facility.

Five Year Limited Warranty (Compressor- Labor Not Included): In the second through fifth year from the date of original retail purchase, Avallon will replace the compressor free of charge. The consumer will be responsible for all transportation and labor costs. Avallon will supply a new, rebuilt, or refurbished compressor and may request for the defective compressor to be returned in exchange. This limited 5-Year warranty is for the compressor only and does not include labor.

All warranties apply to the original purchaser only, and only covers defects in workmanship experienced during operation of the product under normal service, maintenance, and usage conditions. This warranty applies to the purchase and use of this product in residential settings within the United States of America. All products and parts replaced by Avallon under warranty service become the property of Avallon. All defective products and parts covered by this warranty will be repaired or replaced on a mail-in basis to an Avallon authorized repair facility.

Exceptions: Commercial or Rental Use Warranty: 90 days labor and parts from date of original purchase. No other warranty applies.

WHAT IS NOT COVERED:

Labor charges for installation, setup or training to use the product. Shipping damage, and any damage caused by improper packaging for shipment to an authorized service center, and any damaged caused by improper voltage or any other misuse, including abnormal service, handling, or usage. Cosmetic damage such as scratches and dents. Normal wear and tear on parts or replacement of parts designed to be replaced, e.g. filters, cartridges, batteries. Service trips to deliver, pick-up, or repair, install the product, or to instruct in proper usage of the product. Damages or operating problems resulting from misuse, abuse, operation outside environmental specifications, uses contrary to instructions provided in the owner’s manual, accidents, vermin, fire, flood, improper installation, unauthorized service, maintenance negligence, unauthorized installation or modification, or commercial use. Labor, service transportation, and shipping charges for the removal and replacement of defective parts, beyond the initial 24-month period. Products that have been modified to perform outside of specifications without the prior written permission of Avallon. Products lost in shipment, or theft. Products sold AS IS or from an unauthorized reseller. Products that have had their serial numbers removed, defaced, or with serial numbers that have been invalidated. Damage from other than normal household use. Replacement or repair of household fuses, circuit breakers, wiring or plumbing. Damage to personal property from use of product. Damage from service other than from an authorized Avallon repair facility. Hoses, knobs, lint trays and all attachments, accessories and disposable parts. Any service charges not specifically identified as normal such as normal service area or hours. Any special or consequential damages arising out of the use of the product.

OBTAINING WARRANTY SERVICE:

If you believe your product is defective, contact Avallon Customer Support for troubleshooting assistance and warranty service at www.avallon.com or call 1-866-471-7427. Before contacting Customer Support, you are required to have your model number, serial number and proof of purchase available upon request. Once an Avallon authorized representative has confirmed that your product is defective and eligible for warranty service, the product must be returned to an Avallon authorized repair facility. Avallon is not responsible for damage resulting from shipper mishandling or improper packaging. Do not return a defective product to the place of purchase. Products received without a return authorization number will be refused.

THIS WARRANTY IS IN LIEU OF ANY OTHER WARRANTY, EXPRESS OR IMPLIED, INCLUDING WITHOUT LIMITATION, ANY WARRANTY OF MERCHANTABILITY OR FITNESS FOR A PARTICULAR PURPOSE. TO THE EXTENT ANY IMPLIED WARRANTY IS REQUIRED BY LAW, IT IS LIMITED IN DURATION TO THE EXPRESS WARRANTY PERIOD ABOVE. NEITHER THE MANUFACTURER NOR ITS DISTRIBUTORS SHALL BE LIABLE FOR ANY INCIDENTAL, CONSEQUENTIAL, INDIRECT, SPECIAL, OR PUNITIVE DAMAGES OF ANY NATURE, INCLUDING WITHOUT LIMITATION, LOST REVENUES OR PROFITS, OR ANY OTHER DAMAGE WHETHER BASED IN CONTRACT, TORT, OR OTHERWISE. IN NO EVENT AND UNDER NO CIRCUMSTANCE OF ANY TYPE OR KIND SHALL THE SELLER, MANUFACTURER AND/OR DISTRIBUTOR BE LIABLE FOR ANY REASON, UNDER ANY THEORY, FOR MORE THAN THE BASIC COST OF THE PRODUCT TO THE

©2026 Ferguson Enterprises, LLC V1.0-07072026

PURCHASER OR END USER. SOME STATES DO NOT ALLOW THE EXCLUSION OF INCIDENTAL OR CONSEQUENTIAL DAMAGES, SO THE ABOVE EXCLUSION MAY NOT APPLY TO YOU. THIS WARRANTY GIVES YOU SPECIFIC LEGAL RIGHTS. YOU MAY HAVE OTHER RIGHTS THAT VARY FROM STATE TO STATE.

©2026 Ferguson Enterprises, LLC V1.0-07072026

©2026 Ferguson Enterprises, LLC V1.0-07072026

©2026 Ferguson Enterprises, LLC V1.0-07072026