AVALUX
SEN987-4632-10

COMPLETELY FRAMELESS HINGED SHOWER ENCLOSURE

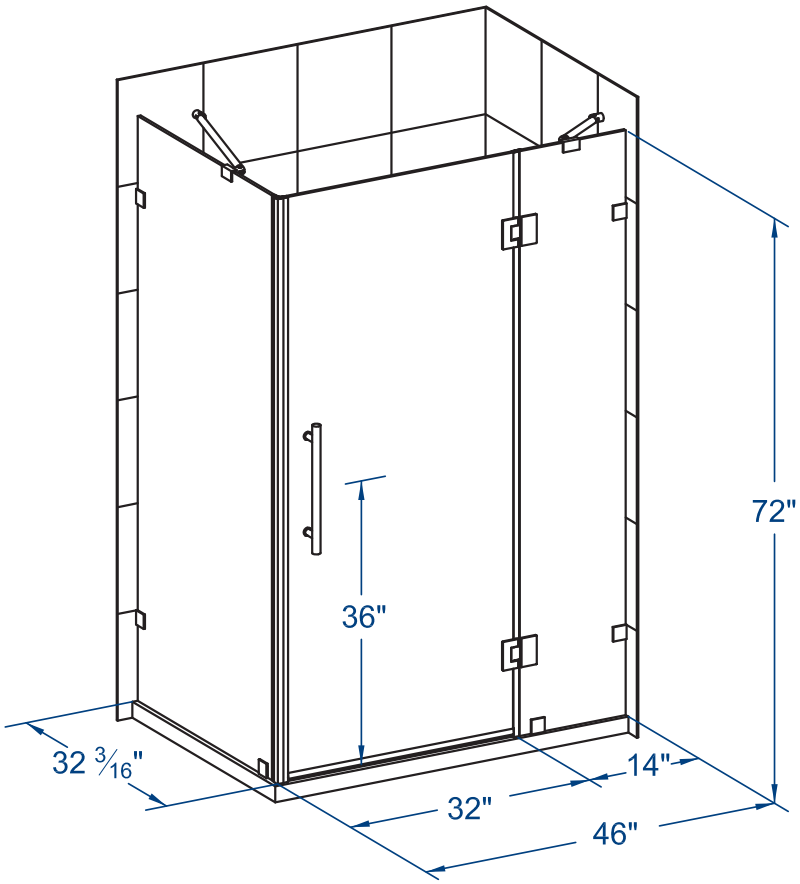

FEATURES

COMPLETELY FRAMELESS

REVERSIBLE DOOR

CORNER ALCOVE

HINGED

GLASS OPTIONS

CLEAR GLASS

FROSTED GLASS

FINISHES

BG BRUSHED GOLD

CH POLISHED CHROME

MB MATTE BLACK

NBR NEW SOLID BRONZE

ORB OIL RUBBED BRONZE

SS BRUSHED STEEL

DRAWING SHOWN IS REPRESENTATIVE OF ACTUAL PRODUCT AND NOT TO SCALE. ASTON GLOBAL RESERVES THE RIGHT TO MODIFY OR UPDATE THE MATERIALS PICTURED WITHOUT PRIOR NOTICE FOR THE PURPOSE OF PRODUCT IMPROVEMENT AND CUSTOMER SATISFACTION.

ASTON GLOBAL INC
902 NICHOLSON ROAD
SUITE 100
DALLAS, TX 75042

SUPPORT@ASTONBATH.COM

1-877-424-9699 | OPTION 2
(8:30AM - 5:30PM CST; MON TO FRI)

ASTONBATH.COM