Dishwasher

DFI563XXL.U

30 series
Noise level (max): 42 dB(A)
Number of place settings: 14 pcs
Number of racks: 3
Upper rack type: Core Premium
Size: XXL
Auto Door Open Drying™
Residual heat
ADA Compliant: No
Automatic dosing system: No
Installation: Panel ready

Most Efficient 2025 ENERGY STAR www.energystar.gov

ENERGY GUIDE

Construction and performance
• 8 Steel™ - Vital parts of the dishwasher made in stainless steel: No
• No need to rinse the dishes thanks to Super Cleaning System™: Yes
• Automatic water-softener for better washing performance: No
• Number of spray arms: 3 pcs
• Number of spray zones: 8
• Cleaning systems: Stainless steel spray arms, Aqua Level™ Sensor, No need to rinse the dishes thanks to Super Cleaning System™, Sensi Clean™ Sensor - measures dirtiness level, 2 x WideClean

Use and flexibility
• Number of place settings: 14 pcs
• Number of racks: 3
• Top tray: No logotype, Handle, With telescopic rails, Dividable and removable
• Upper rack type: Core Premium
• Upper basket system: No
• Upper basket: Small distance between the basket threads - makes loading easy and prevents small items to fall through, Handle with plastic logotype, Foldable wine shelves to left, Foldable wine shelves to right, Fixed pin rows, Fixed glass support, Standard knife stand, Perfect ergonomy with easy sliding telescopic rails
• Middle basket: Without middle basket
• Lower rack type: Core Premium
• Lower rack: Cutlery basket, Foldable/divisible rear pin row, Handle with plastic logotype, Small distance between the basket threads - makes loading easy and prevents small items to fall through.
• Automatic dosing system: No
• Interior light: No

Interaction and control
• Wifi: No
• Type of display: LCD display
• Status Light™ - Visual indication of dishwashing progress: Yes, spot on floor
• Remaining time indication: Yes
• Wash end indication: Displayed with sound and light
• Language settings: Ukrainian, Swedish, Serbian, Slovenian, Slovak, Russian, Portuguese, Polish, Norwegian, Dutch, Latvian, Lithuanian, Japanese, Italian, Croatian, French, Finnish, Estonian, Spanish, English, German, Danish, Czech

Functions, programs and modes
• Programs: Self cleaning, Rinse and hold programme, Time program, Standard, Intensive program, Quick wash, Auto wash, Sanitize
• Delayed start: Possible to delay up to 24 hours

• Options and modes: Night mode - Lower noise level. The program time is extended., Speed mode - The program time is shortened. More energy is used., Time set, Super Rinse™ - Two extra rinses, Enable/disable automatic door opening

Design and integration
• From the front adjustable door spring: Yes
• From front adjustable rear foot: Yes
• Installation: Velcro strips for easy mounting and adjustment of the separate custom door, Multi fit outlet hose, Integrated anti-siphon - Prevents spontaneous in- and outlet of water and simplifies elevated installation, Steam protection strip
• Sliding door: No
• Possible to install elevated: Yes
• Custom door size: Custom door size 700-800
• Min. niche width: 24 ''
• Min. niche height: 33 7/8 ''
• Depth (incl. wall spacing): 21 7/8 ''
• Max Height adjustment: 1 15/16 ''
• Adjustable kick plate: 50-100/90-120

Safety and maintenance
• Aqua Safe™: Anti Block™ - Self cleaning drain pump, Light and sound alarm, Maximum time for water intake, Extra durable PEX inlet hose, Stand-by water protecion - Leakage detection when machine is off, Aqua Level™ Sensor - Ensures an optimized water level, Aqua Detect™ - Instant recognition of any leakage in the motor compartment, Detection of water leakage on the bottom plate, Waterproof bottom plate, Sealing points outside container
• Aqua Safe™ system: No
• Child safety: Kid Safe™ - Lockable controls
• Indication of low level of rinse-aid: Notification in display

Technical data
• Water connection: Hot or cold
• Max. temperature of inflow water: 140 °F
• Noise level (max): 42 dB(A)
• Reference programme: 1
• Duration of standard programme: 120 min
• Estimated yearly energy consumption: 205 kWh
• Energy consumption - normal program: 0.9 kWh
• Estimated annual water consumption: 647.5 gal
• Water consumption: 3 gal
• Power consumption in standby mode: 1.7 W
• Plug type: USA
• Connected load: 1300 W
• Voltage (V): 120 V
• Number of phases: 1
• Fuse: 15 A
• Frequency: 60 Hz
• Required inlet water pressure psi: 0,3-1
• Net weight: 71.7 lb

Dimensions
• Width: 23 13/16 ''
• Height: 33 11/16 ''
• Depth: 21 7/8 ''
• Maximum product height: 35 11/16 ''
• Length of electrical cord: 71 7/16 ''
• Depth with door open: 48 1/2 ''
• Length inlet hose: 63 3/4 ''
• Length outlet hose: 90 9/16 ''

Logistic information
• Packaging width: 25 3/16 ''
• Packaging height: 36 1/4 ''
• Packaging depth: 26 3/16 ''
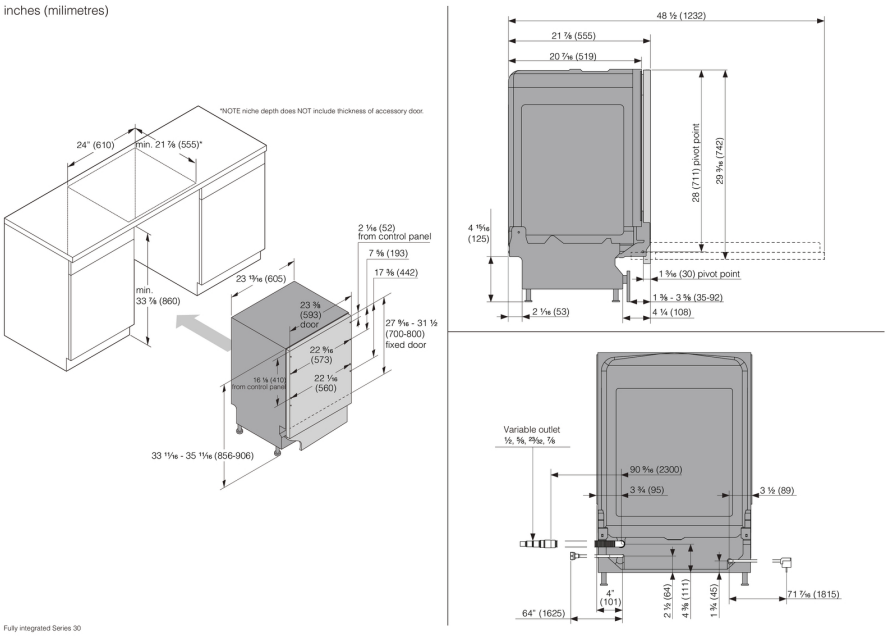
- Gross weight: 75.6 lb
- Product code: 746935
- EAN code: 3838783039385