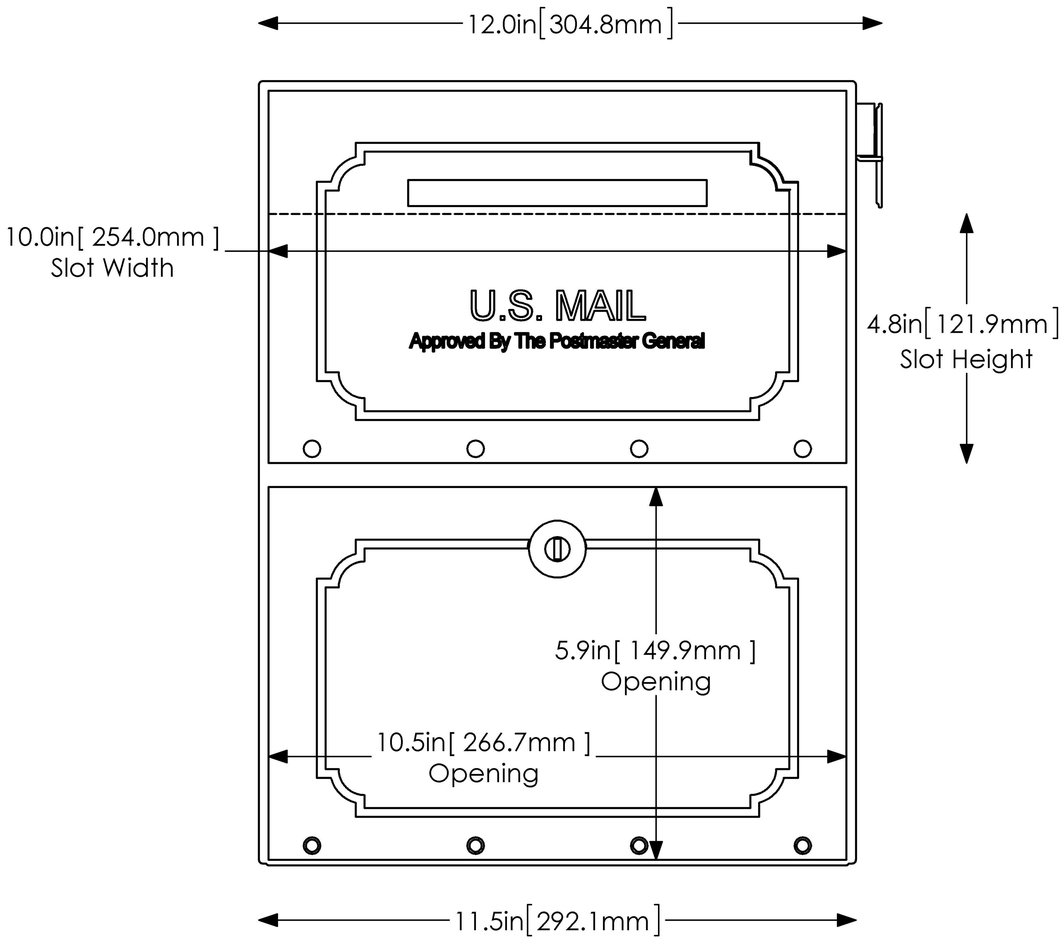
12.0in[304.8mm]
10.0in[254.0mm]
Slot Width
U.S. MAIL
Approved By The Postmaster General
4.8in[121.9mm]
Slot Height
5.9in[149.9mm]
Opening
10.5in[266.7mm]
Opening
11.5in[292.1mm]

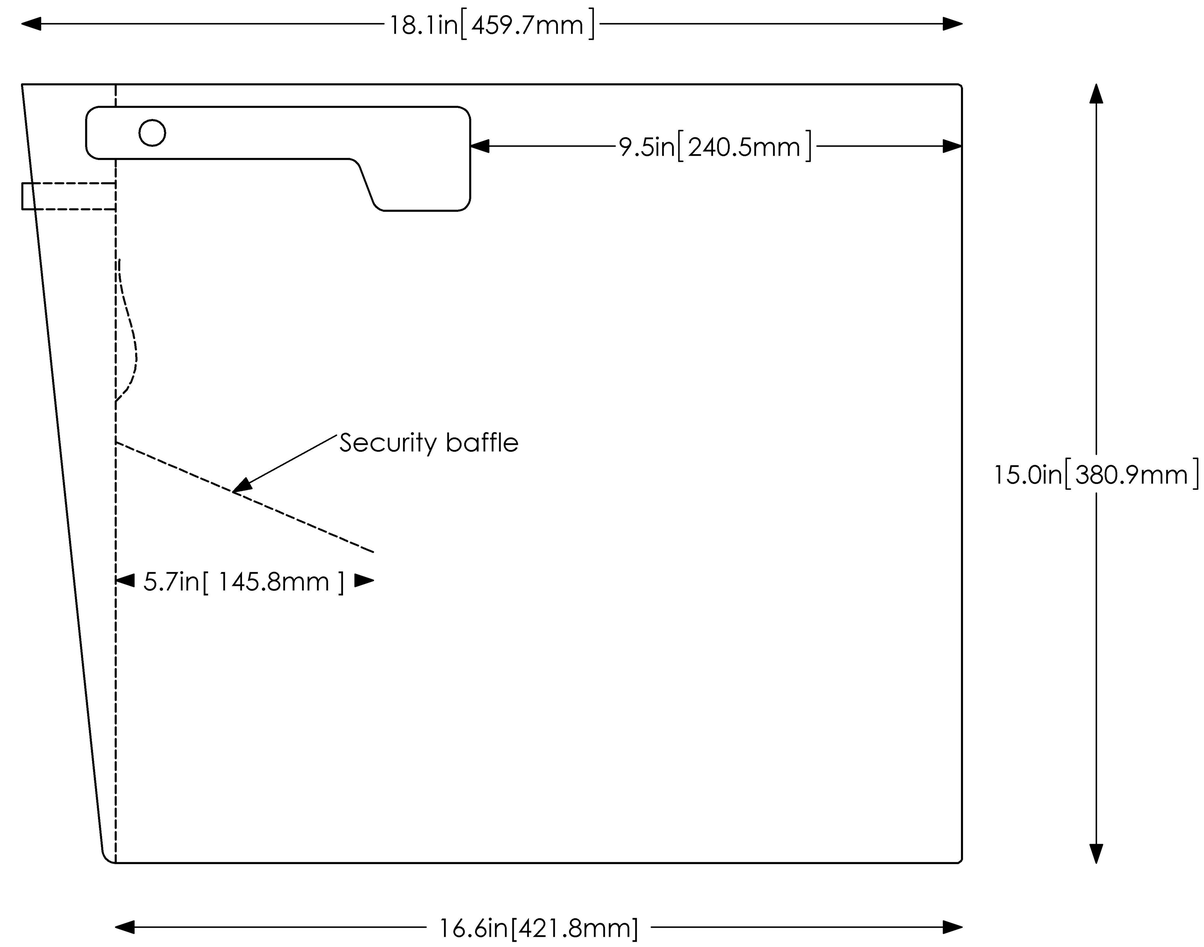
18.1in[459.7mm]
9.5in[240.5mm]
Security baffle
5.7in[145.8mm]
15.0in[380.9mm]
16.6in[421.8mm]

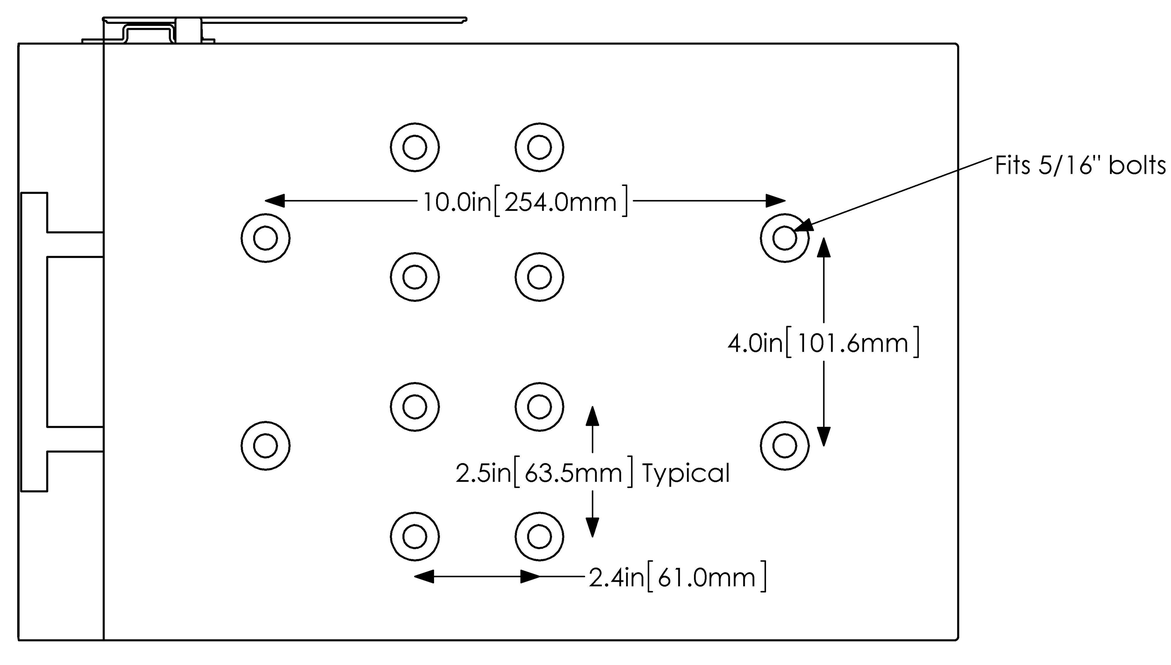
Fits 5/16" bolts
10.0in[254.0mm]
4.0in[101.6mm]
2.5in[63.5mm] Typical
2.4in[61.0mm]