FREESTANDING FAUCET INSTALL GUIDE

HAVE QUESTIONS? CALL 1-844-44-ANZZI OR VISIT ANZZI.COM

Package Contents :

- 1- Freestanding Tub Filler Faucet
- 1- Installation Accessories
- 1- Hand Shower And Hose
- 2- Cover Plate

TOOLS YOU WILL NEED:

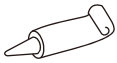

Plumber’ s putty

Pipe tape

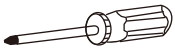

Philips screwdriver

Pliers

Adjustable wrench

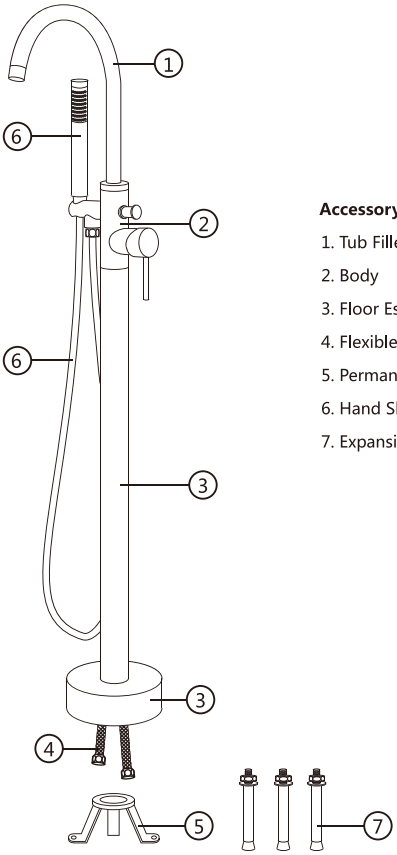

Accessory List:

1. Tub Filler Spout
2. Body
3. Floor Escutcheon
4. Flexible Hoses x 2
5. Permanent Seat
6. Hand Shower and Hose
7. Expansion Screw

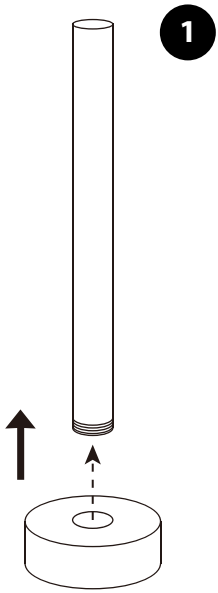
1

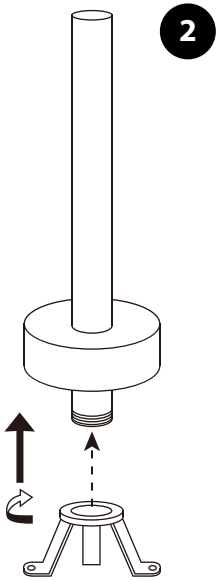
2

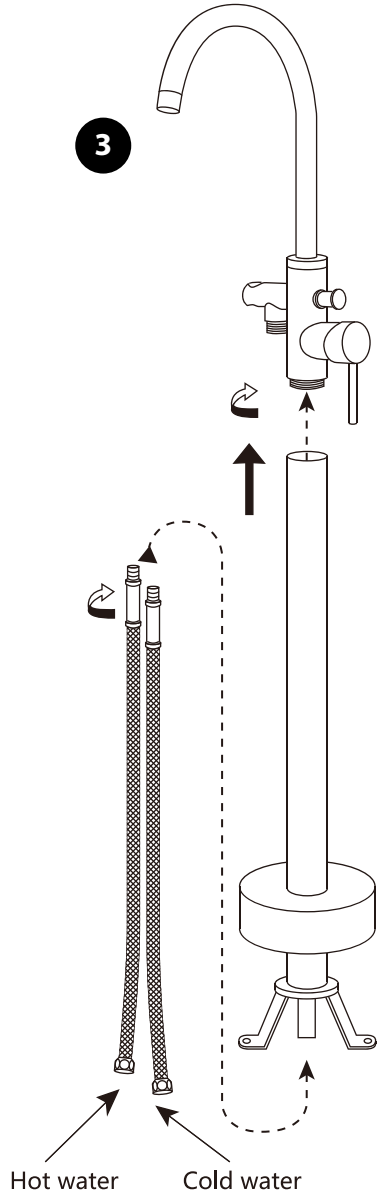
3
Hot water
Cold water

4

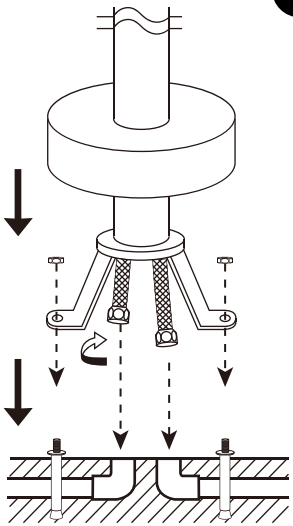
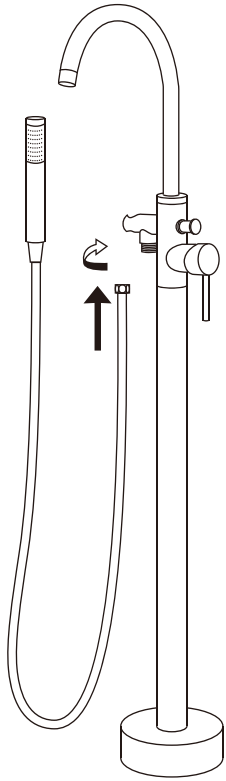
5