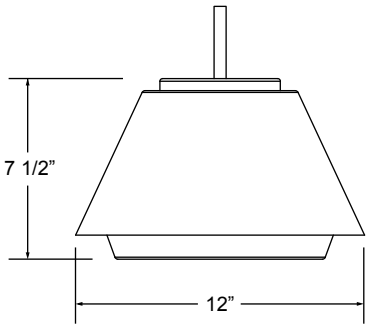

Project: _____

Fixture Type: _____ Quantity: _____

Customer: _____

Made in USA

Illuminating ENGINEERING SOCIETY

Specifications

Material:
Shades are constructed of heavy duty spun aluminum.

Lens:
Diffused acrylic lens is standard.

Electrical:
Medium base or GU24 base socket, 60w Maximum.

Certifications:
UL Listed for dry locations.

Finish:
A polyester powder coat high quality finish is electro-statically applied and baked at 430° for exceptional durability and color retention. Products undergo an intensive five-step cleansing and pretreatment process for maximum paint adhesion.

Canopy finish will match cord color.

Modifications:
Consult factory for custom or modified luminaires.

MDS12

Weight: 3.5 lbs

Catalog Logic

MDS12	-	MB	-	BLC	-	56	-	56	-	41
RLM Style		Lamp Holder		Mounting		Outer Shade Finish		Inner Shade Finish		Trim Finish

Catalog Number

MDS12	—	1	—	2	—	3	—	4	—	5

1 LAMP HOLDER

MB - Medium Base (E26)

GU24 - GU24 Base

2 MOUNTING

Cable Mounts

SSC-BLC (Stainless steel cable with 6-foot black cord and canopy)

SSC-WHC (Stainless steel cable with 6-foot white cord and canopy)

Cord Mounts

BLC (6’ black cord with 3/4” x 5 3/8” canopy)

WHC (6’ white cord with 3/4” x 5 3/8” canopy)

Stem Mounts

1/4" (1/2” OD Stems with 45° Swivel Flat Canopy)

1STS6 1STS12 1STS18 1STS24 1STS36 1STS48

1STS60 1STS72 1STS96

1/4” (1/2” OD Rigid Stems with Flat Canopy)

1STR6 1STR12 1STR18 1STR24 1STR36

1STR48 1STR60 1STR72 1STR96

3 4 5 FINISHES

Note: Trim is the shade top cap and lens ring

Standard Grade		Standard Grade	
40	Raw Unfinished	53	Copper Clay
41	Black	56	Silver
42	Forest Green	61	Black Verde
43	Bright Red	70	Painted Chrome
44	White	71	Painted Copper
45	Bright Blue	72	Textured Black
46	Sunny Yellow	73	Matte Black
47	Aqua Green	76	Textured Architectural Bronze
49	Galvanized	77	Textured White
50	Navy	78	Textured Silver
51	Architectural Bronze	10	Aspen Green
52	Patina Verde	11	Cantaloupe
12	Lilac	13	Putty

Premium Grade		Premium Grade	
81	Extreme Chrome	64	Candy Apple Red
80	Textured Desert Stone	65	Cobalt Blue
67	Butterscotch	82	Graystone
66	Caramel	69	Gunmetal Gray
68	Black Silver	83	Oil Rubbed Bronze

Consult factory for additional paint charges and availability

WARRANTY

See www.anplighting.com for complete fixture warranty

© 2016 ANP Lighting. All rights reserved. These specifications are intended for general purposes only.
ANP reserves the right to change material or design, without prior notice, in a continuing effort to upgrade its products.