ALTAIR
www.altairdesignusa.com

Altair Design,Inc.

INSTALLATION SPECIFICATION

Model No.	776036-LED-AC
Description	LED Bathroom Mirror
Overall Dimensions	W36" x H30'' x D1.18''
LED light	CCT 3000K/4000K/6000K
Standard	110V,IP44 rated
Net weight(LBS)	20.9
Mirror Certification	ETL
Mount Type	Wall Mounted
Orientation	Horizontal and Vertical
Power Source	Hardwired right out of the box
Touch-Sensitive	Yes

All measurements are approximate.Measurements may vary +/-1/2".

Glitter

36"x30"
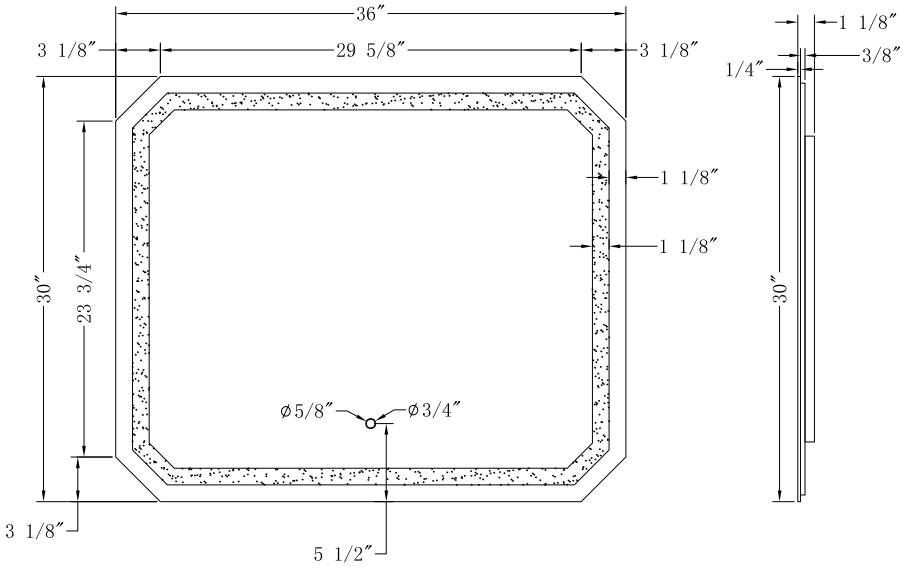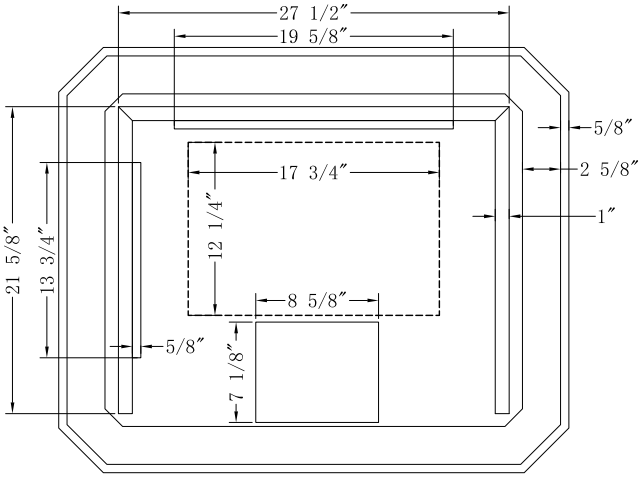
LED Bathroom Mirror