ALTAIR
FASHION BATHROOM LIFE

INSTALLATIONS SPECIFICATION

SKU	53155-BAT-MW
Overall Dimensions	55.1"Wx29.5"Dx21.7"H
Inner Dimensions	42.1"Wx20.9"Dx17.1"H
Bathtub Color Finish	White
Water Capacity (to overflow)	82 gallons
Water Depth (to top)	17.1 inch
Water Depth (to overflow)	14.3 inch
Seating Capacity	1 person
Tub Weight	212.7 lbs.
Overflow Height	0.3 inch
Faucet Congurations	No Faucet Drilling
With pop-up drain	Pop-up drain included
Drain & Overflow Color Finish	Matte White

All measurements are approximate.Measurements may vary +/1/2".

Euston

55.1"x29.5"

Solid Surface Bathtub

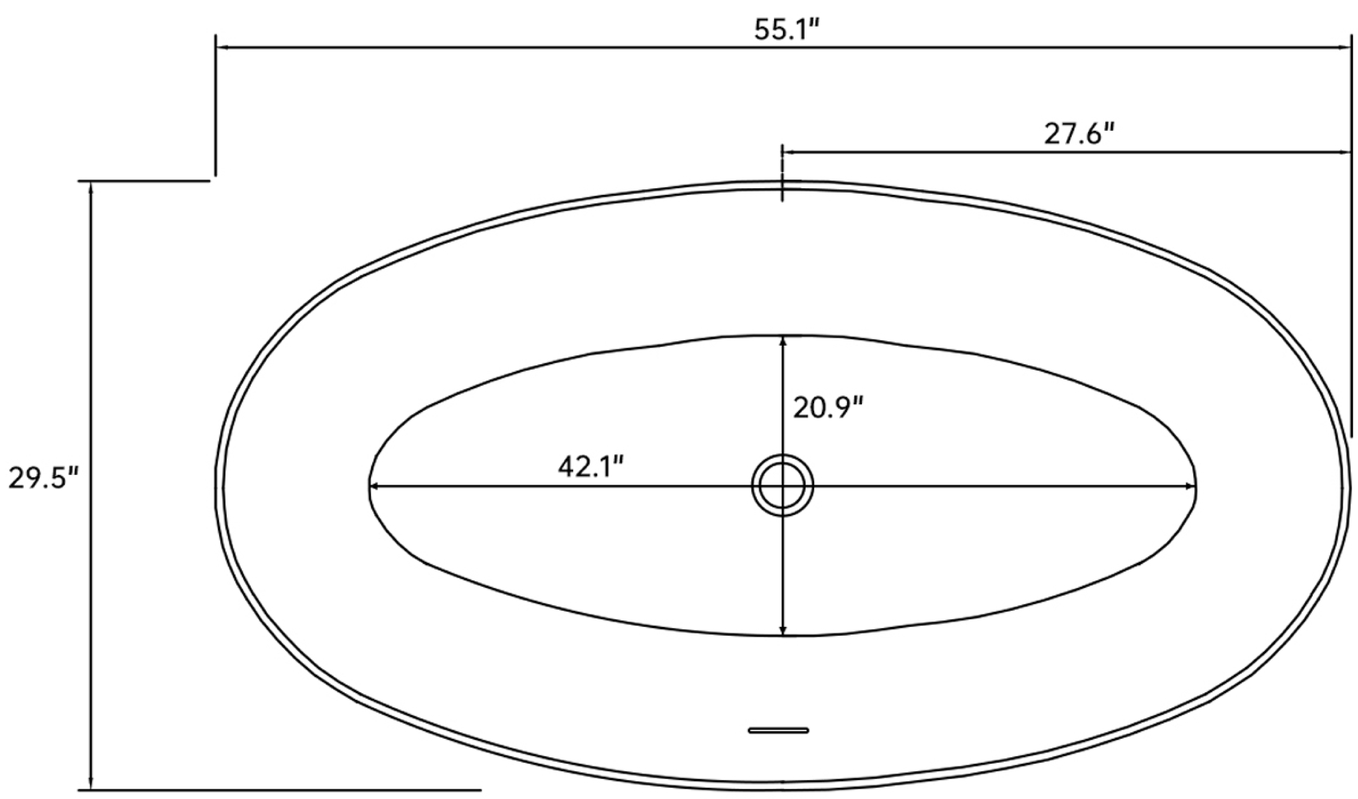

vertical view

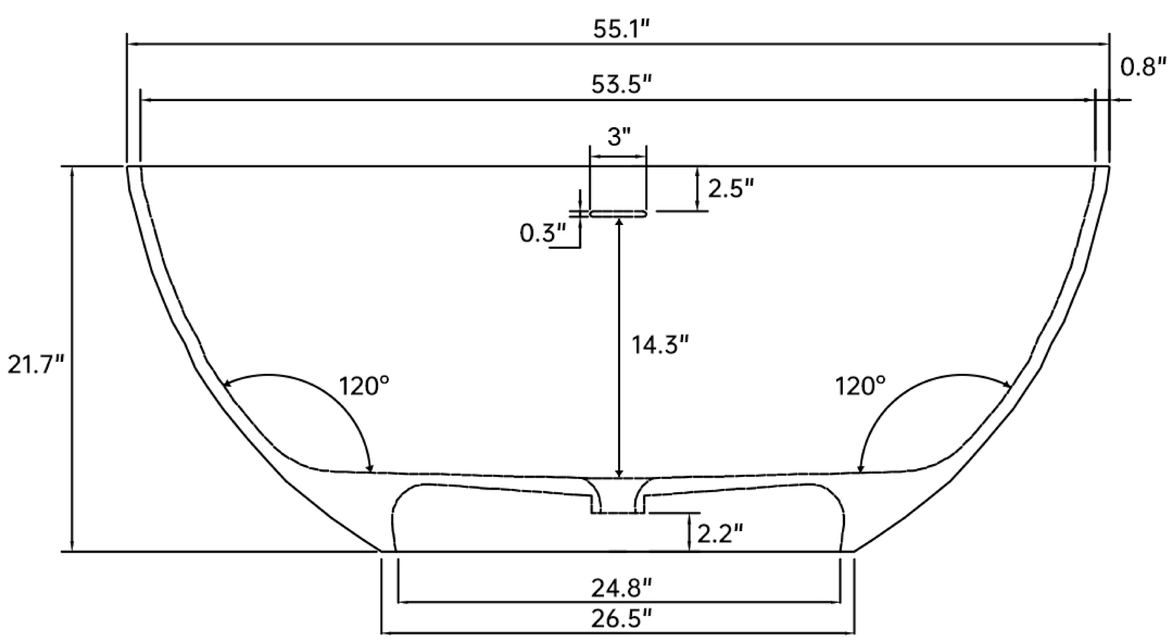

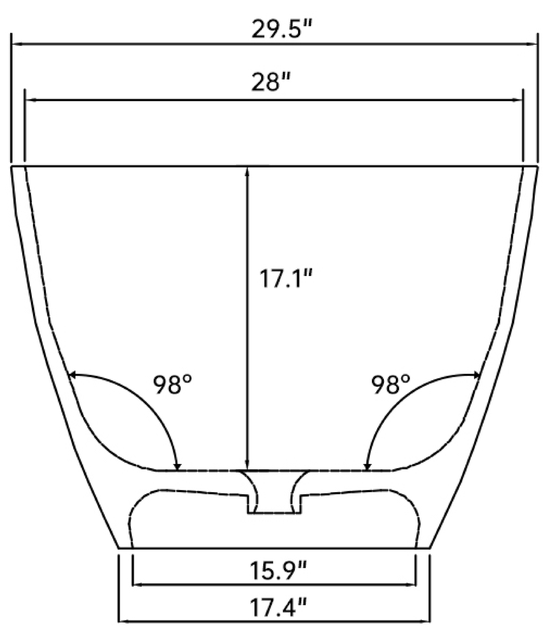

www.altairdesignusa.com

ALTAIR