ALTAIR
FASHION BATHROOM LIFE

INSTALLATIONS SPECIFICATION

SKU	53067-BAT-MW
Overall Dimensions	66.9"Wx33.5"Dx22.0"H
Inner Dimensions	47.2"Wx24.8"Dx17.5"H
Bathtub Color Finish	White
Water Capacity (to overflow)	95 gallons
Water Depth (to top)	17.5 inch
Water Depth (to overflow)	14.4 inch
Seating Capacity	1 person
Tub Weight	281.1 lbs.
Overflow Height	0.3 inch
Faucet Congurations	No Faucet Drilling
With pop-up drain	Pop-up drain included
Drain & Overflow Color Finish	Matte White

All measurements are approximate.Measurements may vary +/1/2".

Giotto

66.9"x33.5"

Solid Surface Bathtub

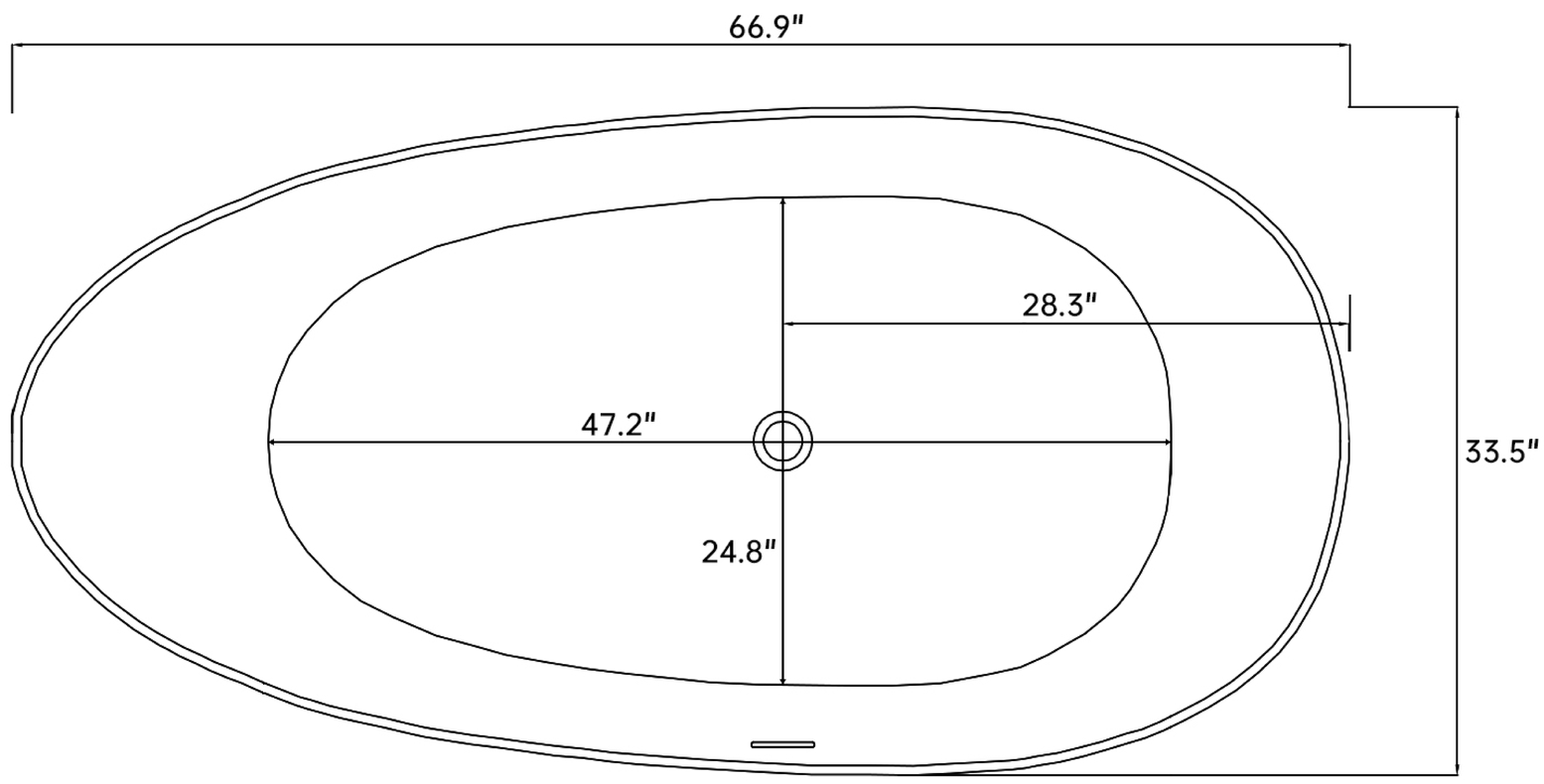

vertical view

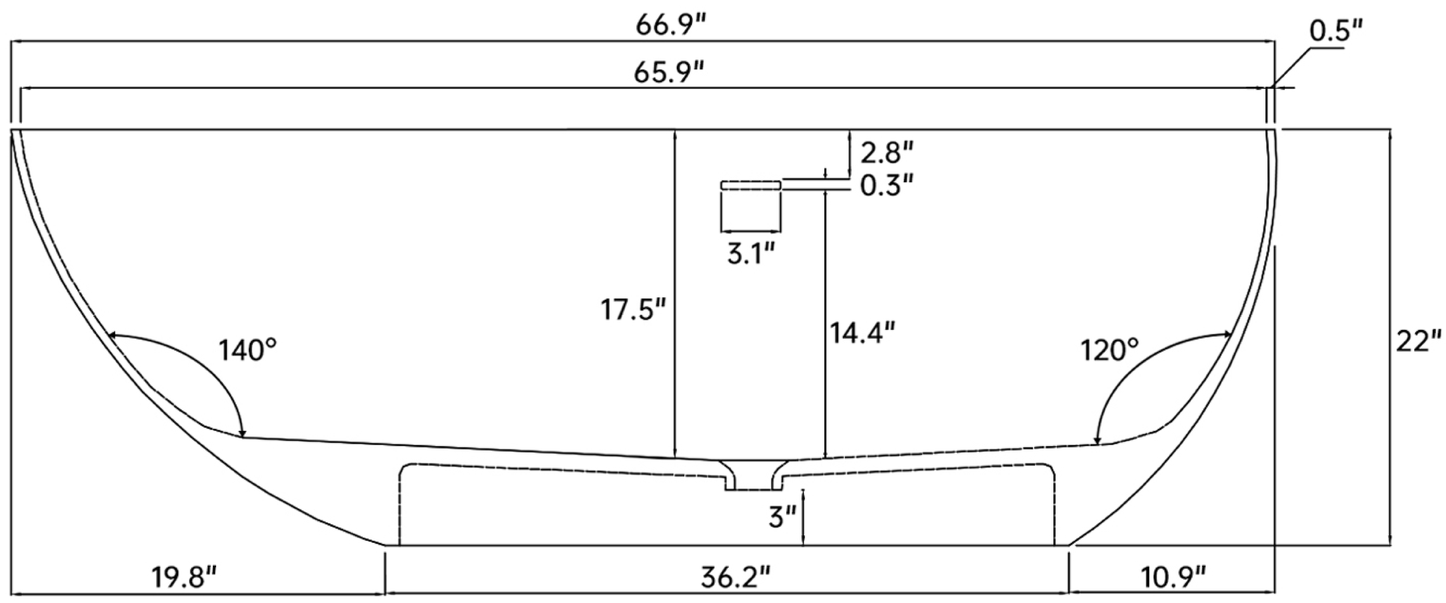

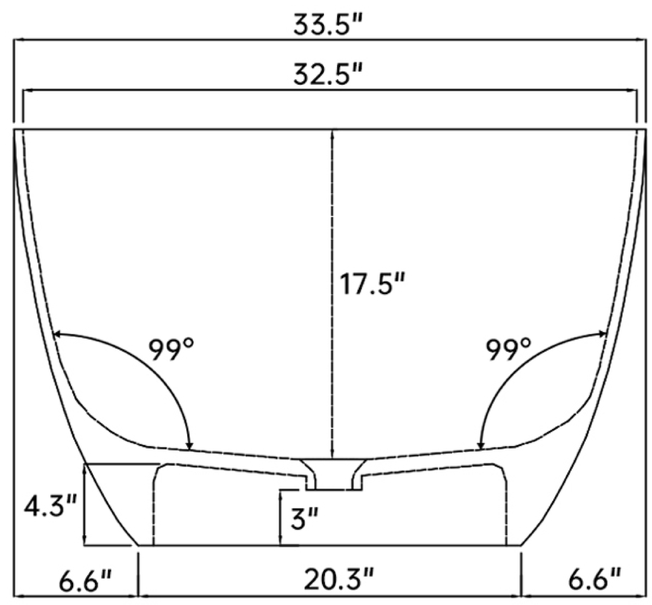

ALTAIR

www.altairdesignusa.com