ALTAIR
FASHION BATHROOM LIFE

INSTALLATIONS SPECIFICATION

SKU	52967-BAT-MW
Overall Dimensions	66.9"Wx39.4"Dx22.0"H
Inner Dimensions	50.4"Wx12.2"Dx18.0"H
Bathtub Color Finish	White
Water Capacity (to overflow)	130 gallons
Water Depth (to top)	18.0 inch
Water Depth (to overflow)	14.9 inch
Seating Capacity	2 person
Tub Weight	319.7 lbs.
Overflow Height	0.3 inch
Faucet Congurations	No Faucet Drilling
With pop-up drain	Pop-up drain included
Drain & Overflow Color Finish	Matte White

All measurements are approximate.Measurements may vary +/1/2".

Cacciar

66.9"x39.4"

Solid Surface Bathtub

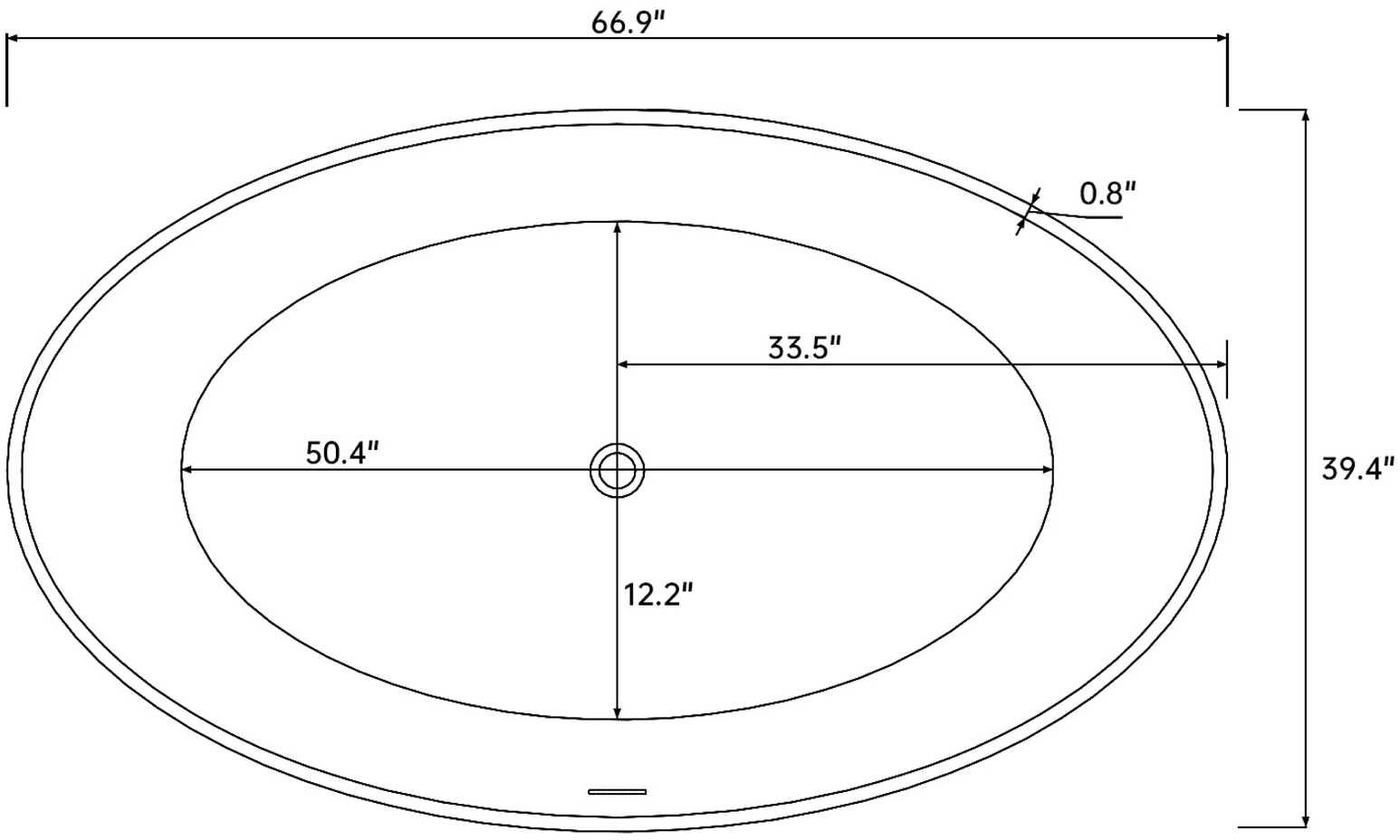

vertical view

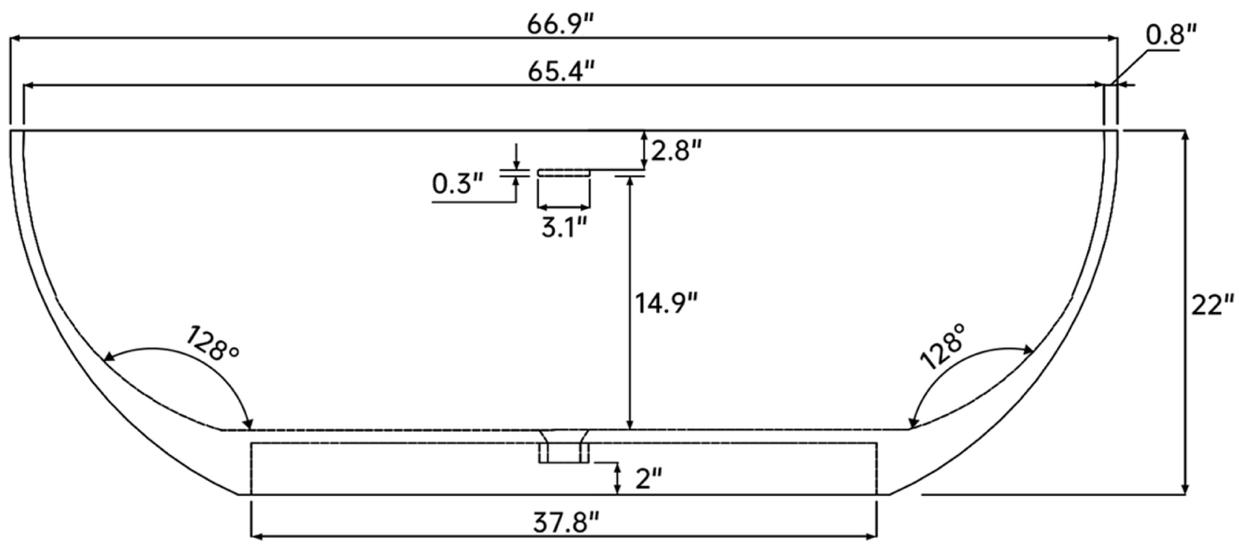

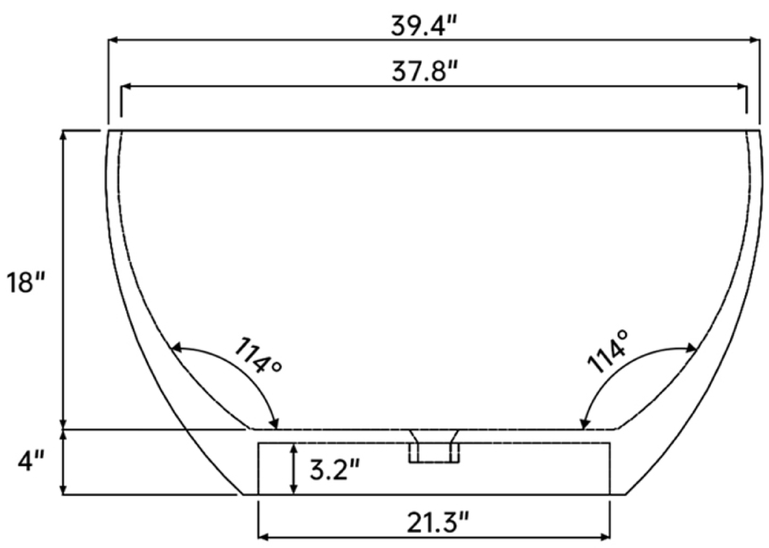

www.altairdesignusa.com

ALTAIR