INSTALLATION SPECIFICATION

SKU	73073-CTP-SW
Product Dimensions	73" W x 22" D x 8"H
Carton Dimensions	75.8" W x 24" D x 10.2"H
Weight	144.3lbs
Material	Engineered Stone
Color Finish	Snow White Finish (SW)
Edge Polishing	Flat Edge
Faucet Hole Spacing(in.)	8 in. Widespread
Bowl	Double bowls

All measurements are aoproximate.Measurements may vary +/-1/2"

Andalo

73" x 22"

Bathroom Vanity Top

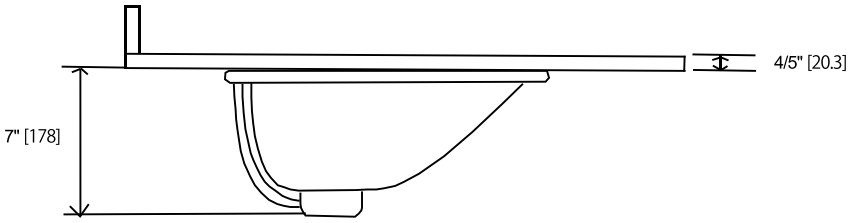

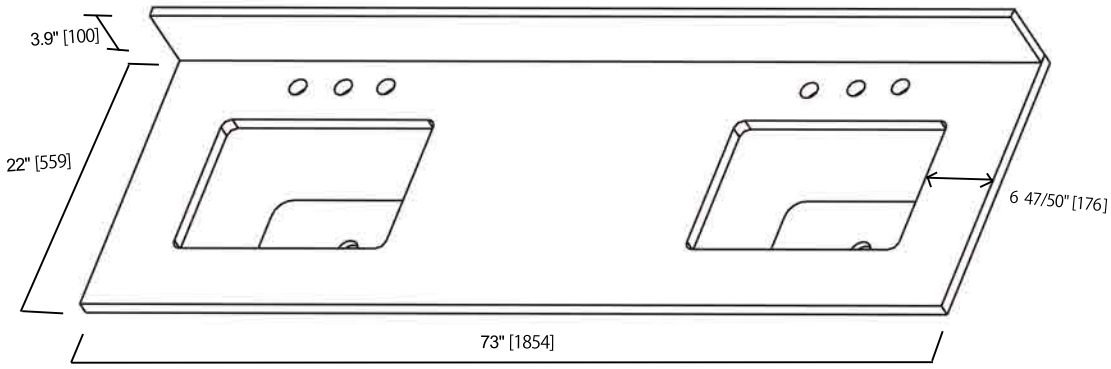

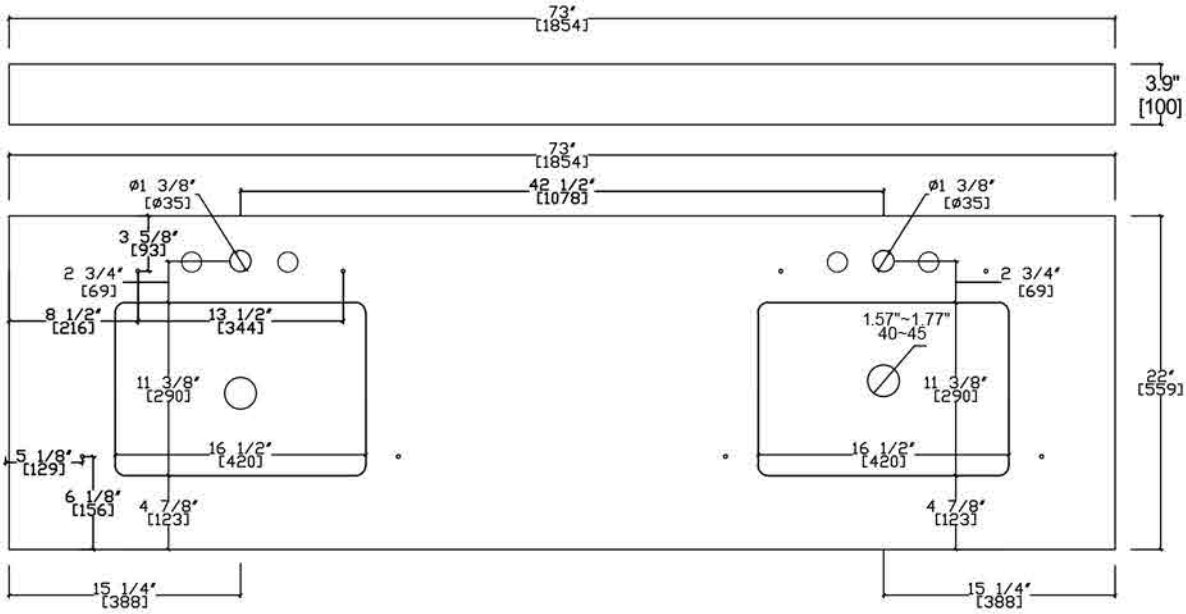

ALTAIR