INSTALLATION SPECIFICATION

SKU	66061-CTP-SW
Product Dimensions	61" W x 22" D x 8"H
Carton Dimensions	63.8" W x 24" D x 10.2"H
Weight	125.2 lbs
Material	Engineered Stone
Color Finish	Snow White Finish (SW)
Edge Polishing	Flat Edge
Faucet Hole Spacing(in.)	Single hole
Bowl	Double bowls

Viterbo

61" x 22"

Bathroom Vanity Top

All measurements are aoproximate.Measurements may vary +/-1/2"

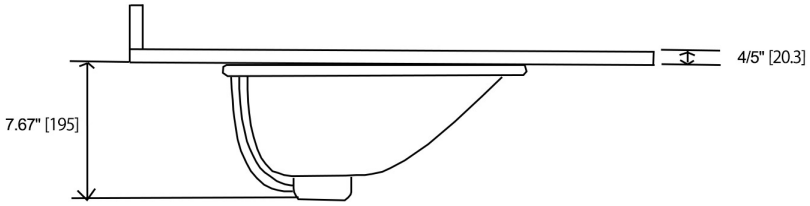

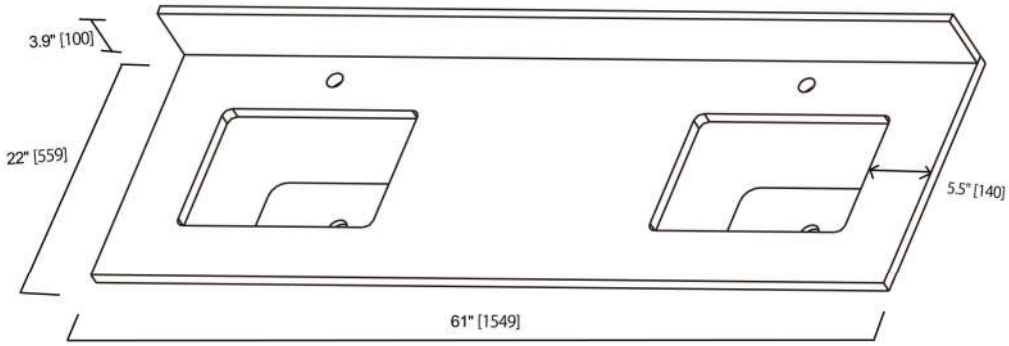

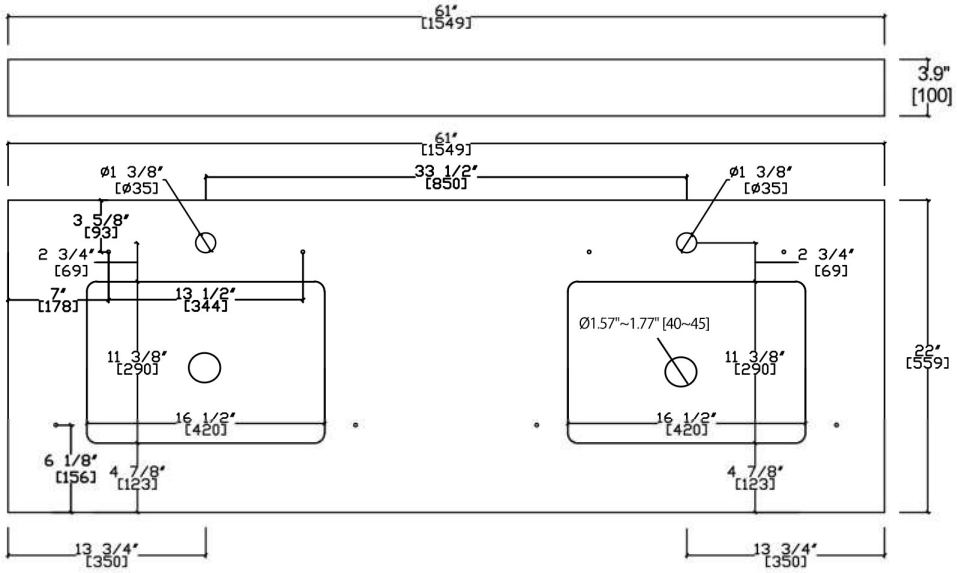

ALTAIR