Altair Kinsley Vanity Collection 536060S-GR-AW-NM

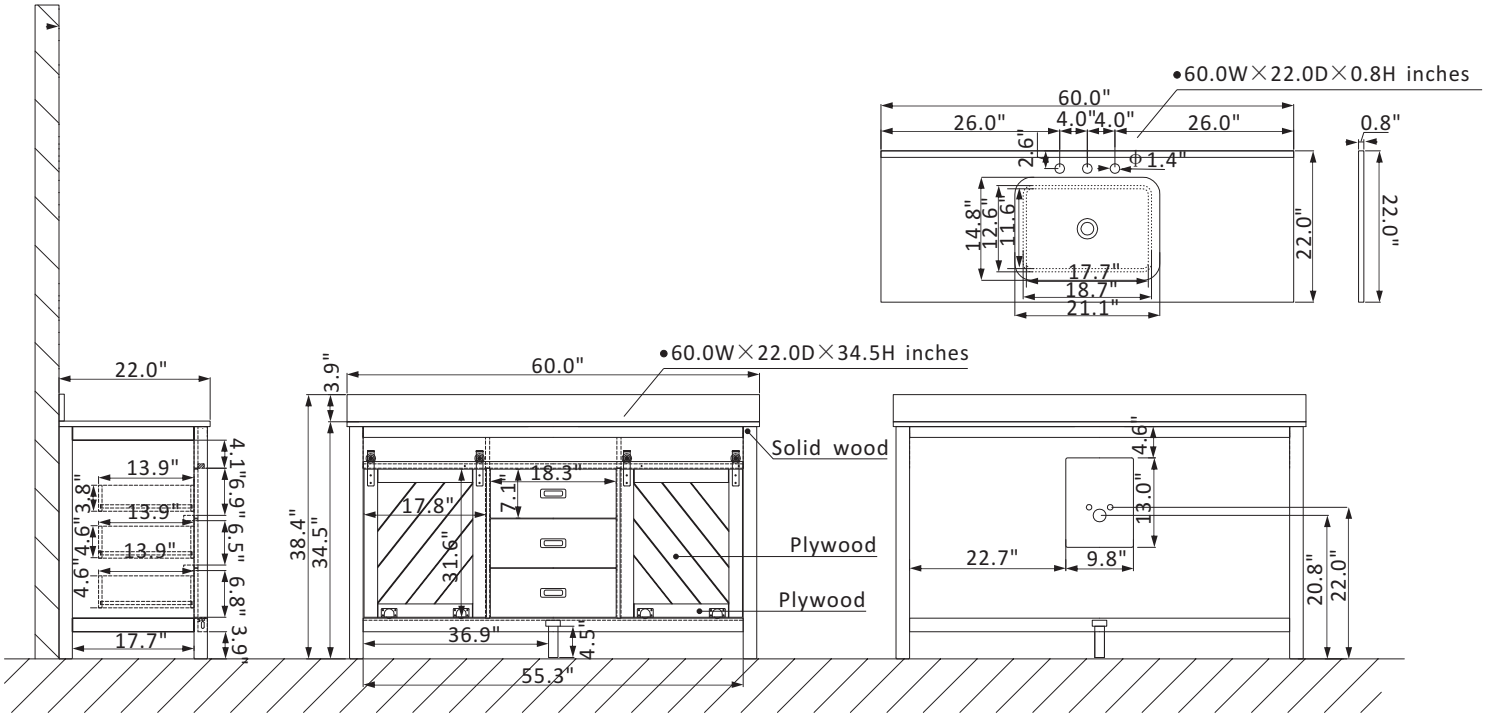

Features

Construction: Solid wood / plywood
Finish: Gray Finish
Countertop: Artificial Carrara White Stone Countertop with backsplash
Sink: Rectangular, undermount ceramic basin with overflow included
Faucet: Vanity top with pre-drilled 8" widespread faucet hole
Door/Drawer: 2 soft-sliding doors and 3 soft-closing drawers
Hardware: Zinc alloy black finish hardware
Installation: Easy plumbing and faucet installation*

* Does not include faucet, drain assembly, or P-trap

ALTAIR
FASHION BATHROOM LIFE