Scale 1:$\frac{1}{0.5}$

AB5008

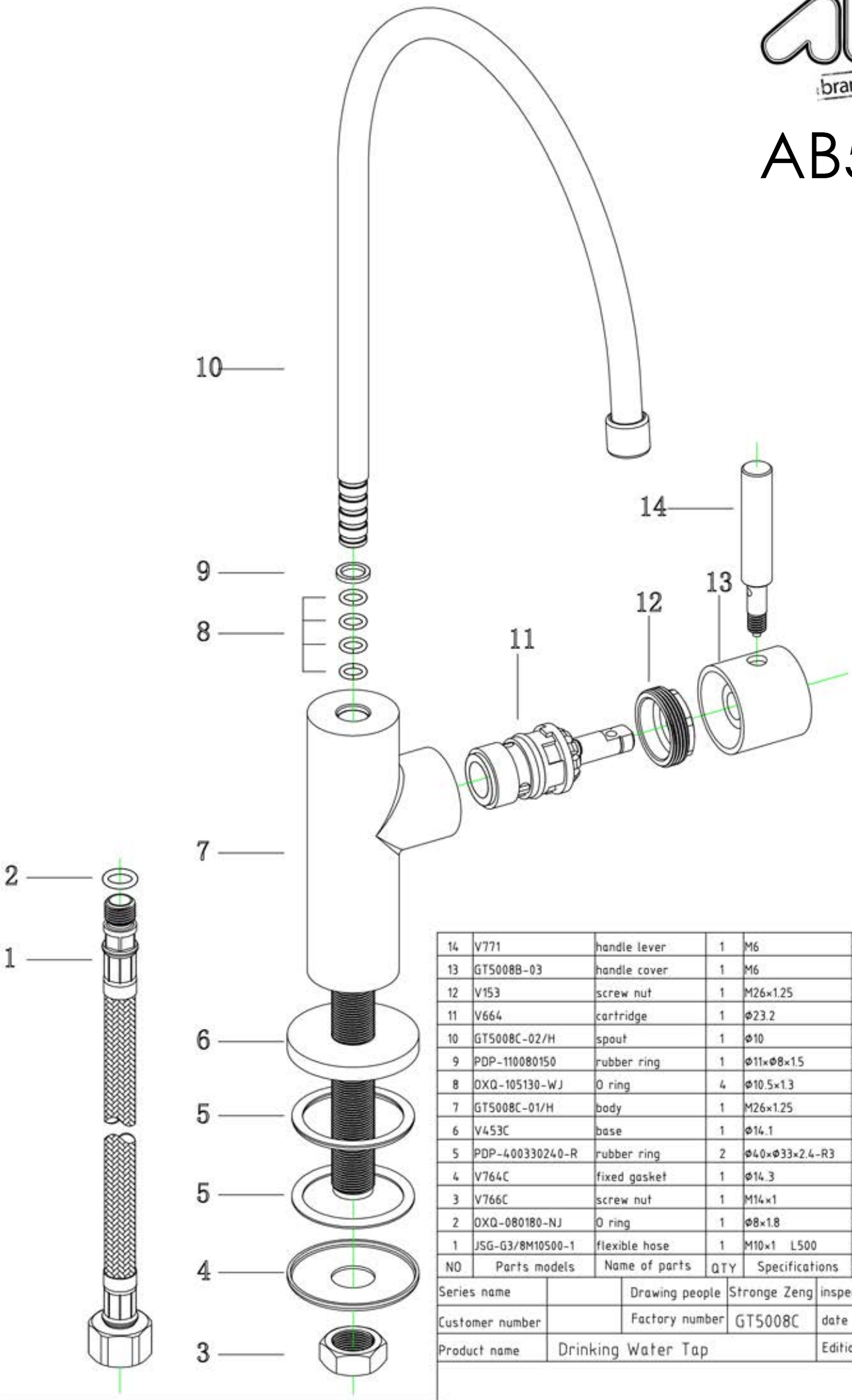

NO	Parts models	Name of parts	QTY	Specifications	Material	Remarks
14	V771	handle lever	1	M6	304	brushed
13	GT5008B-03	handle cover	1	M6	304	brushed
12	V153	screw nut	1	M26×1.25	304	remove burr
11	V664	cartridge	1	Φ23.2	ceramic	white
10	GT5008C-02/H	spout	1	Φ10	304	brushed
9	PDP-110080150	rubber ring	1	Φ11×Φ8×1.5	silicone	white
8	OXQ-105130-WJ	O ring	4	Φ10.5×1.3	dingqing	black
7	GT5008C-01/H	body	1	M26×1.25	304	brushed
6	V453C	base	1	Φ14.1	304	brushed
5	PDP-400330240-R	rubber ring	2	Φ40×Φ33×2.4-R3	rubber	black
4	V764C	fixed gasket	1	Φ14.3	304	remove burr
3	V766C	screw nut	1	M14×1	304	remove burr
2	OXQ-080180-NJ	O ring	1	Φ8×1.8	dingqing	DVGW
1	JSG-G3/8M10500-1	flexible hose	1	M10×1 L500	304	DVGW

Series name		Drawing people	Stronge Zeng	inspector	Norman Yang
Customer number		Factory number	GT5008C	date	2014-05-16
Product name	Drinking Water Tap			Editions	B