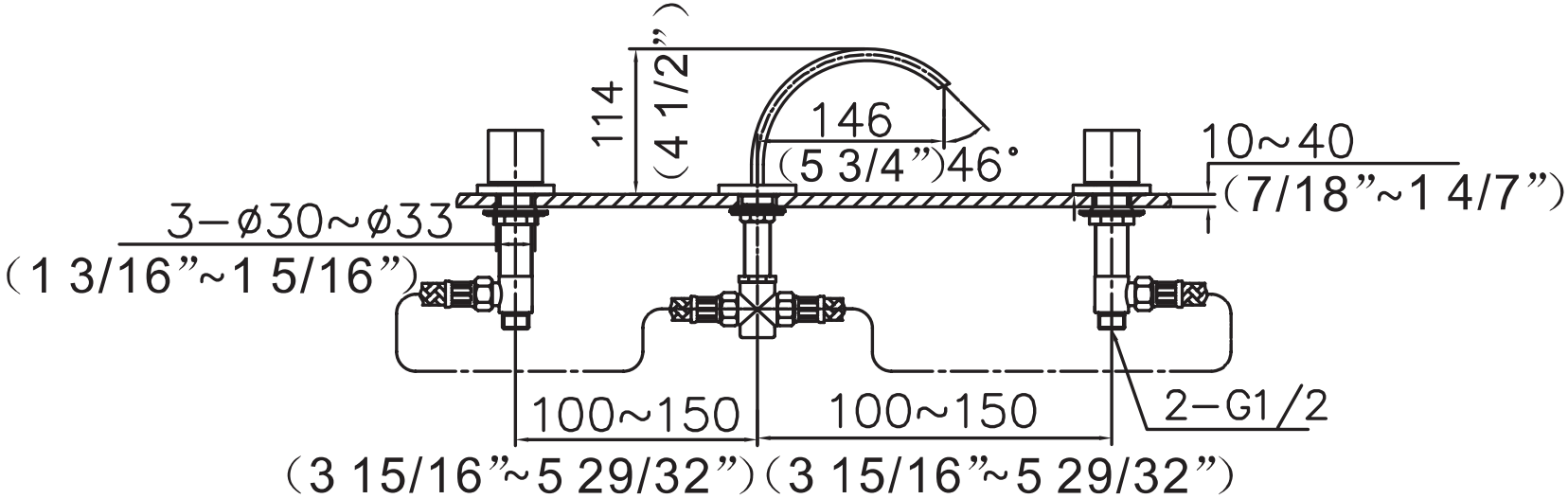
114
(4 1/2")
146
(5 3/4")
46°
10~40
(7/18"~1 4/7")
3-ø30~ø33
(1 3/16"~1 5/16")
100~150
100~150
2-G1/2
(3 15/16"~5 29/32")
(3 15/16"~5 29/32")