Specifications

SINK DESCRIPTION

- Manufactured of 20 gauge, type 301 nickel-bearing stainless steel
- Large bowl is 14" x 16" x 7", smaller bowl is 7-1/2" x 16" x 5"
- The sink ledge has one fixture mounting hole.
- Has two 3-1/2" diameter recessed drain openings
- Is fully undercoated with a sound and temperature insulating material
- The exposed surfaces are polished to a lustrous satin tone finish
- Includes all necessary mounting hardware

CUT OUT DIMENSIONS

- Cut out dimensions are 24-3/4" x 17-7/8", with a 3/4" corner radius. A tolerance of plus or minus 1/16" is acceptable

STANDARDS

- Third party certified to CSA B45 and ASME A112.19.3 and all applicable specifications referenced therein.

WARRANTY

- Warranted for ten years against material or manufacturing defects

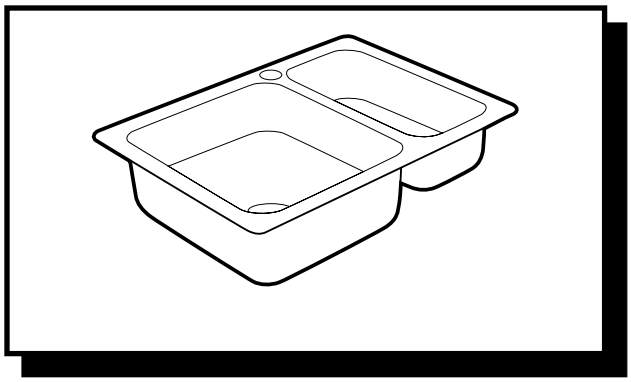

Camelot®
Double Bowl Bar Sink
Model: 22236
(KSR-2518-1)

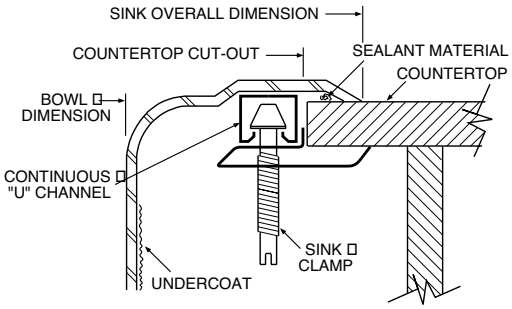

Installation Detail

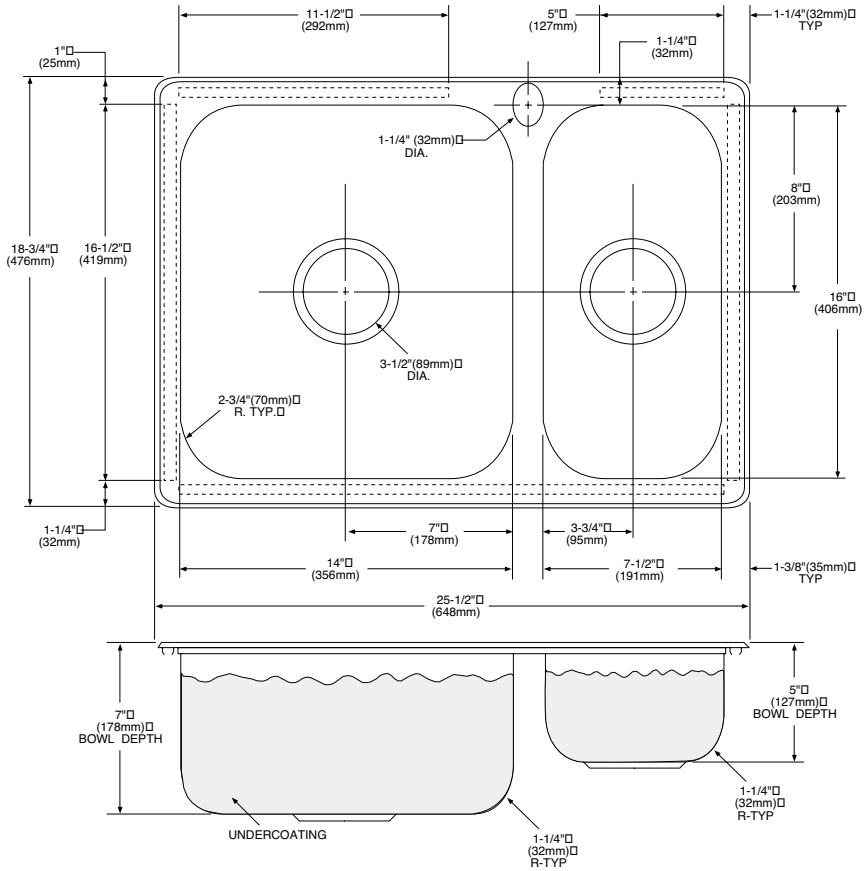

CRITICAL DIMENSIONS

(DO NOT SCALE)