WATERSTONE FAUCETS

26790 Madison Ave.
Murrieta, CA 92562
888-304-0660

www.waterstoneco.com

ITEM NO:	4100-12
STYLE:	TOWSON
INTENDED USE:	KITCHEN FAUCET
CUSTOMER NAME:	JOB NO:

DIMENSIONS MAY VARY AND ARE SUBJECT TO CHANGE. NO RESPONSIBILITY IS ASSUMED FOR USE OF SUPERCEDED OR VOIDED DATA.

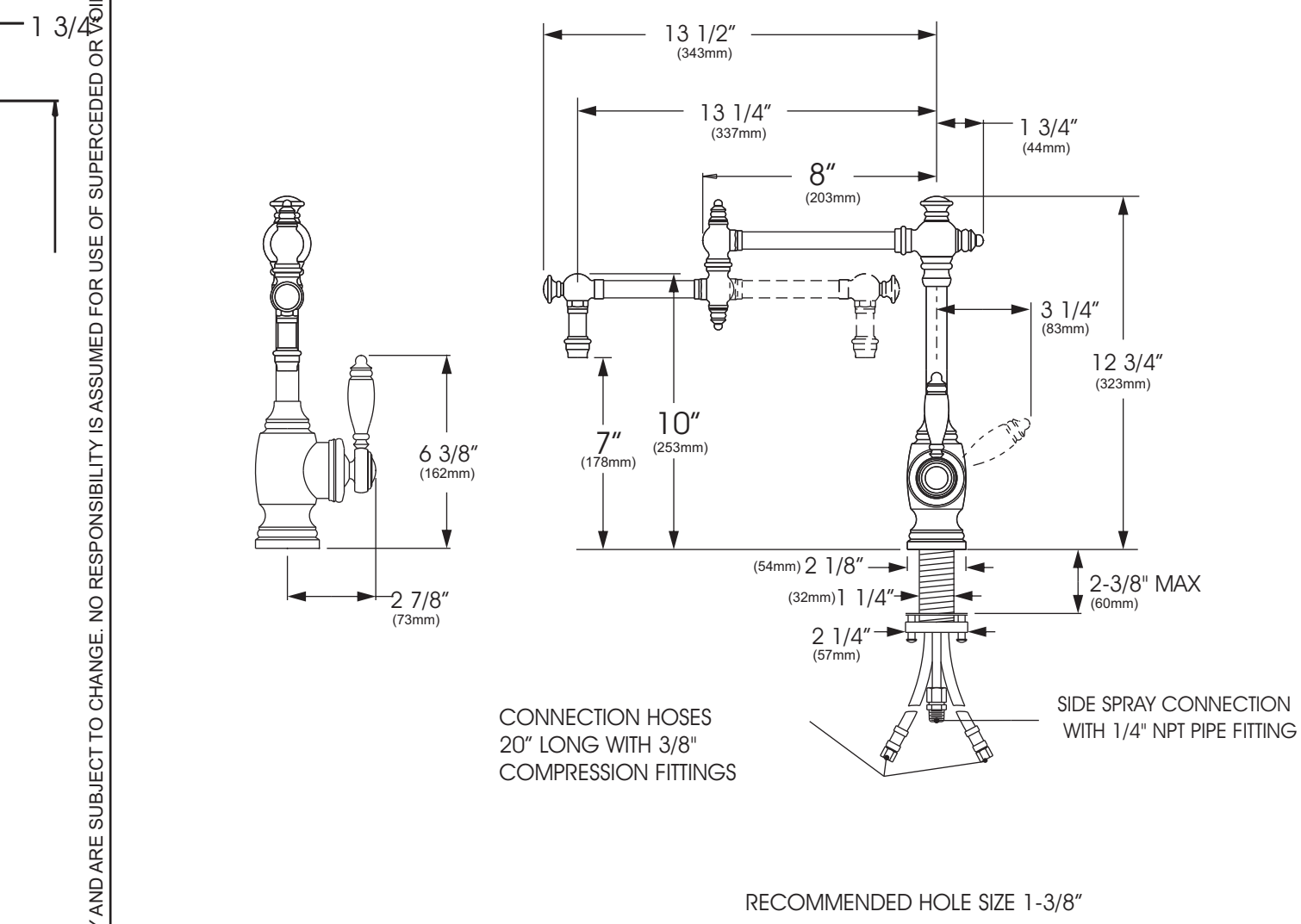

RECOMMENDED HOLE SIZE 1-3/8"

Technical Specifications:

- Solid brass construction.
- Single lever control hot/cold ceramic disk valve cartridge.
- 360 degree swivel spout.
- Aerated stream.
- 3 handle caps included. Plain, and ceramic right hand or left hand operation indicated for hot and cold.
- 2.2 gpm maximum flow rate.
- Diverter equipped for connection to optional side spray.
- Reinforced braided connection hoses.
- Adjustable Teflon® "Friction Lock" aids handle feel and prevents sag.
- Handle adjusts for clearance from backsplash.

Codes/Standards Applicable

Specified model meets or exceeds the following:

- ASME A112.18.1
- CSA B125.1
- NSF 61

DATE: 1-9-08

Made in the U.S.A.