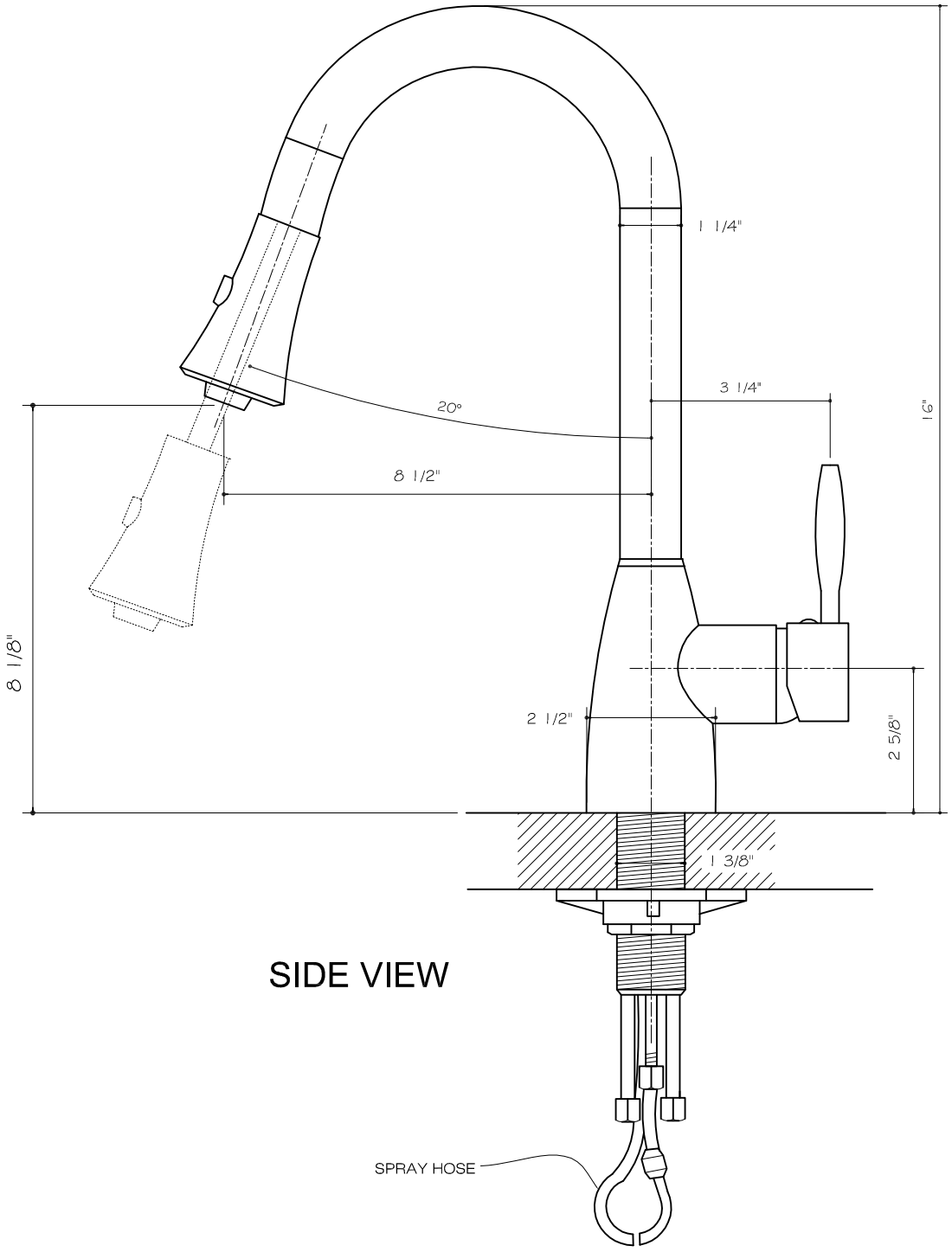

SIDE VIEW

VG02013

THE MEASUREMENTS IN INCHES ARE ROUNDED TO THE NEAREST 1/8"

PACKAGE CONTENT

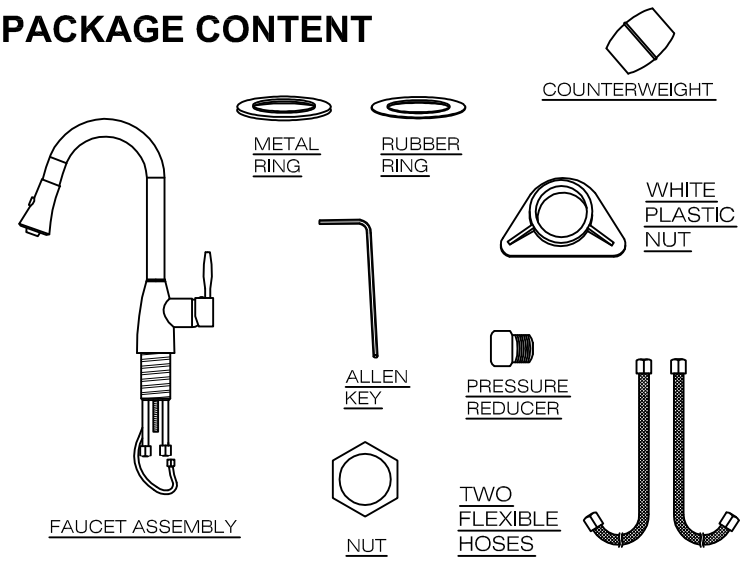

MAINTENANCE

Your new faucet is designed for years of trouble-free performance.
Keep it looking new by cleaning it periodically with a soft cloth. Avoid abrasive cleaners, steel wool and harsh chemicals as these will scratch, dull, and/or damage the finish and/or product void your warranty.

TOOLS NEEDED

Adjustable wrench
Groove joint pliers
Plumber's putty
Pipe tape
Phillips and flat screwdrivers

SAFETY TIPS

If you use soldering for the installation of the faucet, the seats, cartridges and washers will have to be removed before using flame. Otherwise, warranty will be void on these parts
Protect your eyes with safety glasses when cutting or soldering water supply lines
Cover your drain to avoid losing parts.

IMPORTANT POINTS

Prior to beginning installation, turn off the cold and hot water lines and open the hot and cold knobs on the old faucet to release build-up pressure.
When installing your new faucet, turn the connector nuts finger-tight, then use one wrench to anchor the fitting and a second wrench to tighten the nut one additional turn. Connections that are too tight will reduce the integrity of the system.
Wrap all threaded connections with Teflon tape available at your local hardware or plumbing supply store. Always wrap in a clockwise direction.
All installations can vary depending on how your previous faucet was installed. Not all necessary supplies to install your faucet are included, however, they are available wherever plumbing supplies are sold.

For additional assistance visit:

http://www.vigoindustries.com

ASSEMBLY

VIGO®
http://www.vigoindustries.com

NOTE: INSTALLATION MUST BE DONE BY A QUALIFIED, LICENSED PLUMBER.

1 SHUT OFF WATER SUPPLY. REMOVE THE OLD FAUCET AND FLEXIBLE HOSES. CLEAN SINK SURFACE IN PREPARATION FOR THE NEW FAUCET.

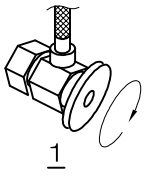
1

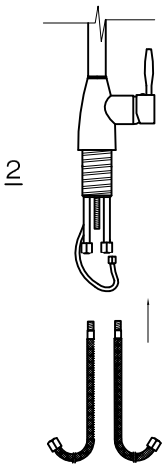
2

2. SCREW MALE END OF FLEXIBLE HOSES TO THE FAUCET.

3. PLACE THE NEW FAUCET IN POSITION ON THE SINK. FROM UNDER THE SINK, PUT WHITE PLASTIC NUT, RUBBER RING, METAL RING AND THREADED NUT ONTO THE PIN. TIGHTEN THE NUT.

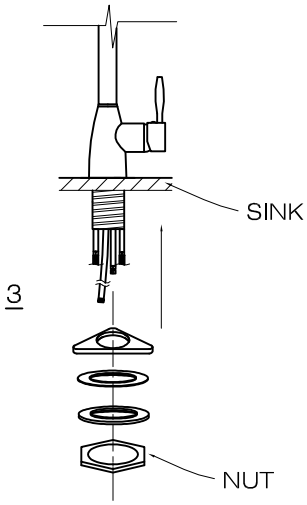

4. SCREW SPRAY HOSE TO THE BRASS PIPE NOT LABELED HOT OR COLD. (ATTACH SILVER PRESSURE REDUCER FOR HIGH PRESSURE HOMES). ATTACH SUPPLIED COUNTERWEIGHT TO THE HOSE.

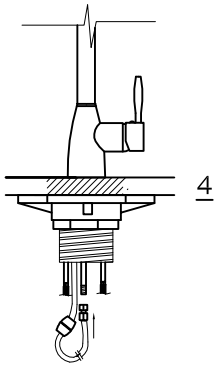
4

5. CONNECT THE FEMALE END OF THE FLEXIBLE HOSES TO THE COLD AND HOT WATER SUPPLY.

6. AFTER INSTALLATION IS COMPLETE, TURN ON THE WATER SUPPLY VALVES AND ALLOW BOTH HOT AND COLD WATER TO RUN AT LEAST ONE MINUTE EACH. WHILE WATER IS RUNNING, CHECK FOR LEAKS, ESPECIALLY AT HOOK-UPS TO SUPPLY LINES. TIGHTENING NUTS SLIGHTLY WILL STOP ANY MINOR LEAKS.

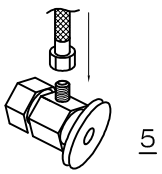
5

VIGO INDUSTRIES, LLC ("VIGO")
FAUCET LIMITED LIFETIME WARRANTY

EFFECTIVE JANUARY 1, 2010

VIGO offers the following limited warranty on each of its Faucet products* (the "Product") and the components thereof. This warranty extends only to the original owner or end-user for personal household use. For commercial uses, additional limitations apply.

VIGO warrants the structural components of the Product to be free from defects in workmanship and materials under normal use and service for the period commencing from the initial date of purchase by the owner or end-user, contractor, or builder, from VIGO or an authorized VIGO dealer, through the lifetime of the original owner or end-user.

VIGO warrants the cartridge component of the Product to be free from defects in workmanship and materials under normal use and service for a period of five (5) years from the initial date of purchase by the owner or end-user, contractor, or builder, from VIGO or an authorized VIGO dealer.

VIGO warrants the spray assembly component of the Product to be free from defects in workmanship and materials under normal use and service for a period of one (1) year from the initial date of purchase by the owner or end-user, contractor, or builder, from VIGO or an authorized VIGO dealer.

Subject to the Warranty Service provision below, any product reported to the authorized dealer or to VIGO as being defective within the warranty period will be repaired or replaced (with a product of equal value) at the option of VIGO. This warranty extends to the original owner or end-user and is not transferable to a subsequent owner.

Neither the distributor, authorized VIGO dealer, nor any other person has been authorized to make any affirmation, representation, or warranty other than those contained in this warranty. Any affirmation, representation, or warranty other than those contained in this warranty shall not be enforceable against VIGO or any other person.

VIGO reserves the right to modify this warranty at any time, it being understood that such modifications will not alter the warranty conditions applicable at the time of sale of the products in question.

Limitations
This warranty shall not apply to instances of incorrect operating procedures, breakages, or damages caused by fault through improper installation, carelessness, abuse, misuse, misapplication, improper maintenance, or alteration of the Product, as well as chemical or natural corrosion, accident, fire, flood, an act of God, or any other casualty. Avoid abrasive cleaners, steel wools, and harsh chemicals as these will scratch, damage, and / or dull the product and / or finish and void this warranty. The owner/end-user of the Product covered by the present warranty is entirely responsible for its proper installation and any applicable plumbing or electrical wiring. VIGO neither installs nor supervises the installation nor hires a contractor for this purpose; consequently, VIGO cannot be held responsible for any default, breakage, or damages caused thereby or resulting thereof, either directly or indirectly.

The owner/end-user must provide access to the components of the Product as described in the installation guide so that VIGO can execute the warranty specified herein. If such access is not available, all expenses to provide said access will be the responsibility of the owner/end-user.

This warranty does not apply to Products that have not been installed or operated in accordance with instructions supplied by VIGO and all applicable rules, regulations, and legislation pertaining to such installations.

This warranty does not apply unless the VIGO Product is installed by fully insured licensed professionals. Vigo strongly recommends that such licensed professionals have experience in the installation of bathroom and kitchen products. Installation of certain products, including without limitation glass products (i.e., shower doors and glass sinks) by an inexperienced person may result in glass breakage and, consequently, cause personal injury or death.

VIGO is not liable for personal injuries or deaths to any persons or for any direct, special, incidental, or consequential damage, loss of time, loss of profits, inconvenience, incidental expenses, labor or material charges, or any other costs resulting from the use of the product or equipment or pertaining to the application of the present warranty, or resulting from the removal or replacement of any product or element or part covered by this warranty.

EXCEPT AS OTHERWISE PROVIDED ABOVE, VIGO MAKES NO WARRANTIES, EXPRESSED OR IMPLIED, INCLUDING WARRANTIES OF MERCHANTABILITY AND FITNESS FOR A PARTICULAR PURPOSE OR COMPLIANCE WITH ANY CODE.

In any case, VIGO cannot be held liable for any amount over and above the purchase price paid for the Product by the owner/end-user, contractor, or builder.

Commercial Limitations
In addition to the above conditions and limitations, the warranty period for products installed for commercial applications or used in commercial ventures is one (1) year from the initial date of purchase by the owner/end-user, contractor, or builder from an authorized dealer. VIGO is not responsible for loss of use or profit under any circumstances. If the product is used as a display, the warranty period begins when the product is placed on display. This warranty gives the owner/end-user specific legal rights. The owner/end-user may also have other rights which can vary from one state or province to another.

Warranty Service
In order to obtain service provided under this warranty during regular business hours, contact the dealer or distributor who sold the unit, or contact VIGO directly. VIGO will provide the warranty service described above when the following conditions have been met: the failure is of the nature or type covered by the warranty; the user has informed an authorized VIGO Agent or VIGO's warranty service department representative of the nature of the problem during the warranty period; conclusive evidence (e.g., proof of purchase or installation) is provided to the foregoing by the user proving that the failure occurred or was discovered within the warranty period; an authorized independent service person or company representative has been permitted to inspect the product during regular business hours within a reasonable time after the problem was reported by the user. VIGOs warranty obligation shall be discharged upon tender of replacement or repair. The customer's refusal to accept the tender terminates VIGO's warranty obligations.

*Certain models are pending approval.
Certification may be ended by VIGO or certification agencies without notice.