1. APPLY LOCTITE 680.
2. CUT O-RING, ITEM 7, TO .20" (SHORTEN BY .13') BEFORE INSTALLING.
3. SLIT O-RING, ITEM 10, BEFORE INSTALLING.
4. INSTALLATION TORQUE: 11-14 LB-FT.
5. ASSEMBLY SHALL BE WATER TESTED.
6. PLACE ITEM 25, 5-035, IN A SEPARATE BAG.
7. INSTALLATION TORQUE: 60-65 LB-FT.
8. LUBRICATE SPRING WITH DOW 111.
9. REWORK CARTRIDGE ASSY IF IT DOES NOT CLOSE BY ITSELF AFTER WATER TESTING.

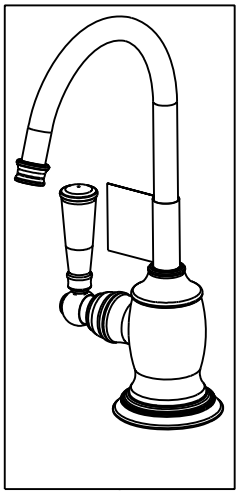

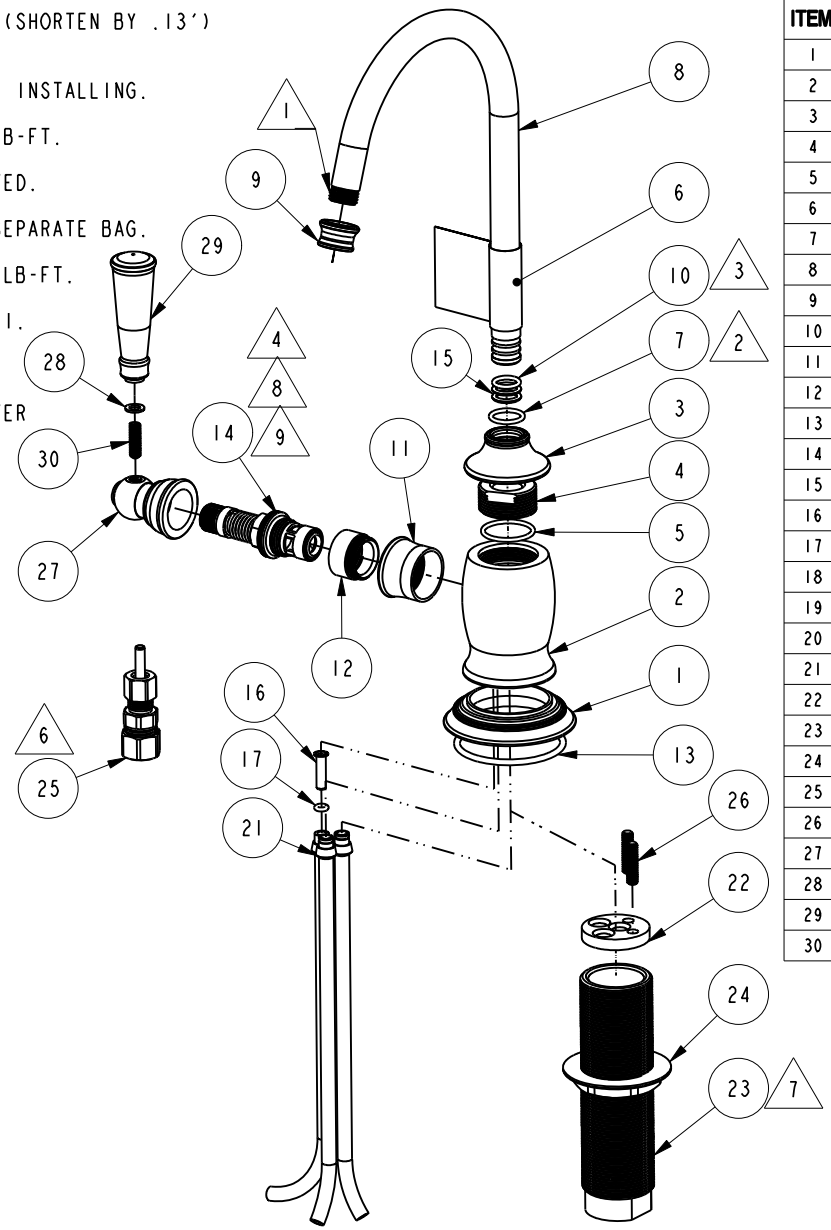

BILL OF MATERIAL (CURRENT LEVEL)

ITEM	PT/ASSY	DESCRIPTION	TYPE	QTY.
1	11731	ESCUTCHEON	PART	1
2	50704	WATER DISP. BODY H (TRAD)	PART	1
3	11732	CAP, BODY, WATER DISP	PART	1
4	11836	RETAINING RING	PART	1
5	91023	O-RING #2-019	PART	1
6	98-0025	TAG LABEL, HOT WATER WARNING	PART	1
7	91383	O-RING, TEFLON, #2-014	PART	1
8	50713	SPOUT, WATER DISP. (TRAD.)	PART	1
9	11733	SHELL, SPOUT, WATER DISP	PART	1
10	91382	O-RING, TEFLON, #2-012	PART	1
11	11734	BONNET	PART	1
12	50714	WATER DISP. CAR.T HOLDER	PART	1
13	91394	O-RING #2-132	PART	1
14	5-055	ADAPTER/CARTRIDGE ASSY	ASSEMBLY	1
15	91017	O-RING #2-012	PART	2
16	50068	INSERT, HOSE	PART	3
17	91100	O-RING #2-006	PART	3
18	91378	TUBE, HIGH TEMP, .250 OD X 4 FT	PART	1
19	91376	TUBE, RED, .250 OD X 4 FT	PART	1
20	91377	TUBE, BLUE, .250 OD X 4 FT	PART	1
21	50066	COMPRESSION RING, 1/2	PART	3
22	50768	RETAINER PLATE	PART	1
23	50770	NIPPLE	PART	1
24	10174	NUT, QUICK CONNECT	PART	1
25	5-035	COUPLING & INSERT ASM	ASSEMBLY	1
26	92016	SET SCREW 10-24 X 3/4"	PART	2
27	11729	BODY HANDLE	PART	1
28	91553	RED IDENTIFIER	PART	1
29	11728	LEVER, HANDLE	PART	1
30	92192	SET SCREW 10-32 X 5/8"	PART	1

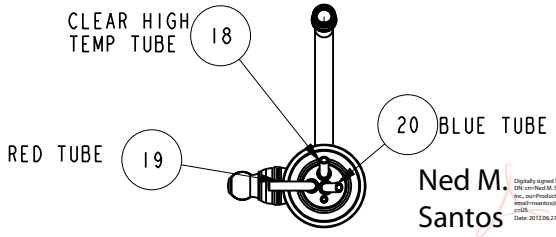

Ned M. Santos

Digitally signed by Ned M. Santos
DN: cn=Ned M. Santos, o=Brasstech, Inc., ou=Product Engineering, email=nmsantos@brasstech.com, c=US
Date: 2012.06.27 10:24:06 -07'00'

COPYRIGHT 2005 BRASSTECH, INC. THESE DRAWINGS AND THE DESIGNS DEPICTED HEREIN ARE THE PROPRIETARY PROPERTY OF BRASSTECH. ANY USE OR REPRODUCTION IS SUBJECT TO THE EXPRESS APPROVAL OF BRASSTECH. UNAUTHORIZED USE IS STRICTLY PROHIBITED. ALL RIGHTS RESERVED.

BRASSTECH INCORPORATED
2001 E. CARNEGIE AVE.
SANTA ANA, CA 92705
(949) 417-5207

JACOBEAN TRADITIONAL HOT WATER DISPENSER "R"

ASSY. NO. 2470-5613

SCALE .300 | REF. - | SHEET 1 OF 2

REV	REV DESC	DATE
B	EN-2204	06/15/12
A	EN-2085	03/05/12
-	EN-1552-4	02/01/11

SPECIFICATION DWG

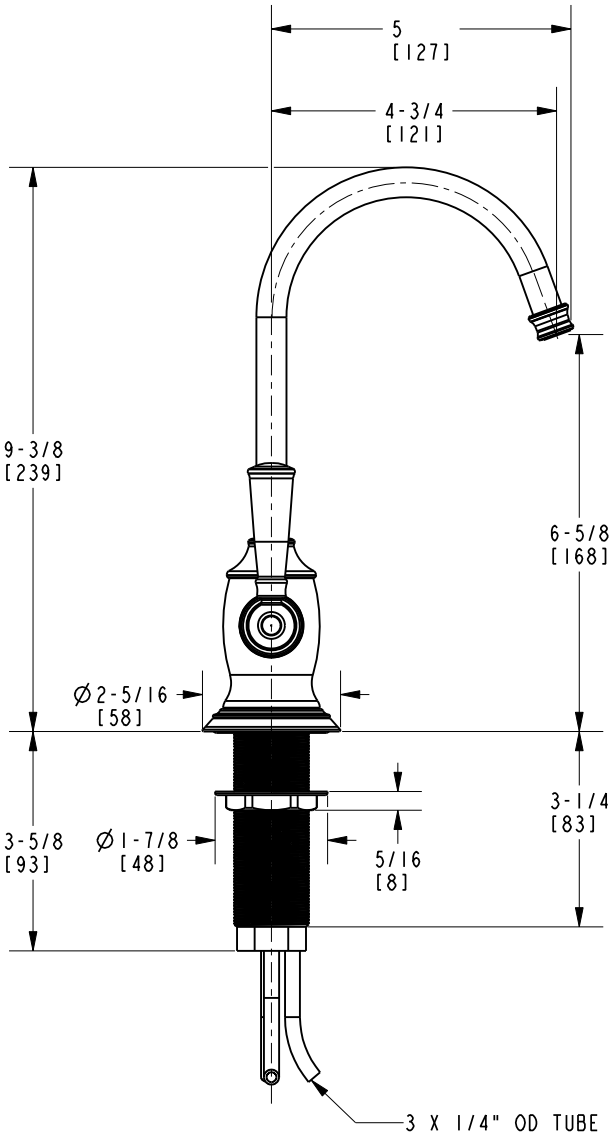

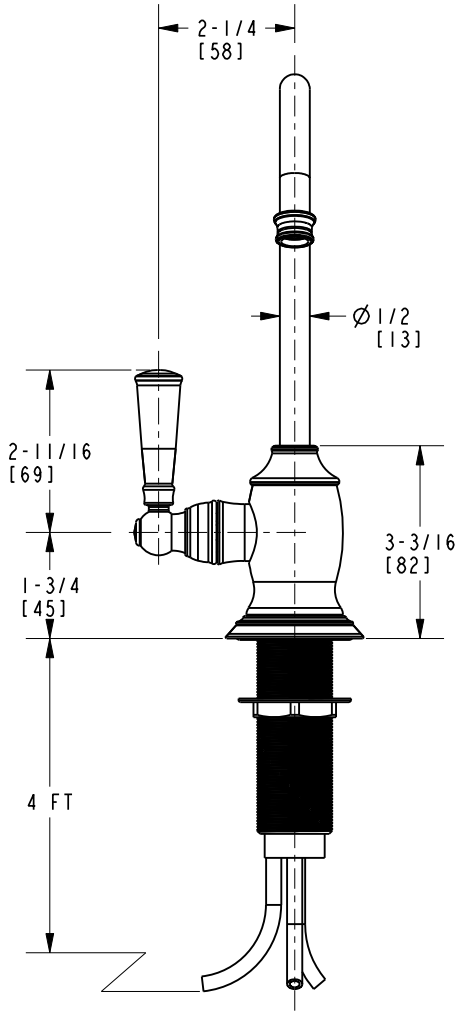

DIMENSIONS ARE IN INCHES AND AN APPROXIMATION OF A TYPICAL INSTALLATION

COPYRIGHT 2005 BRASSTECH, INC. THESE DRAWINGS AND THE DESIGNS DEPICTED HEREIN ARE THE PROPRIETARY PROPERTY OF BRASSTECH. ANY USE OR REPRODUCTION IS SUBJECT TO THE EXPRESS APPROVAL OF BRASSTECH. UNAUTHORIZED USE IS STRICTLY PROHIBITED. ALL RIGHTS RESERVED.

BRASSTECH INCORPORATED
2001 CARNEGIE AVE.
SANTA ANA, CA 92705
(949) 417-5207

DWG NO.	REV
2470-5613	B

SCALE	REF.	SHEET
.313	-	2 OF 2