KOHLER®

Roughing-In

K-6304
VEIL™
WALL-HUNG TOILET WITH BIDET FUNCTIONALITY

Product Information

Applicable product:	
Wall-hung toilet with in-wall tank and carrier system	K-6304

Fixture:	
Configuration	Wall-hung elongated bowl toilet
Water per flush	1.6 gpf (6 lpf) or 0.8 gpf (3 lpf)
Passageway	3″ (76 mm)
Water area	4-1/2″ (114 mm) x 5-1/2″ (140 mm)
Seat post hole centers	5-1/2″ (140 mm)

Included components:	
Bowl	K-6300
Toilet seat	K-4744
In-wall tank and carrier system	K-6284
Dual flush actuation plate	K-6298

Electrical Requirements:	
Max electrical rating	120 VAC / 60 Hz / 1260 W

A dedicated circuit protected with a Class A Ground-Fault Circuit-Interrupter (GFCI) or Residual Current Device (RCD) is required.

Installation Notes

Install this product according to the installation guide.

Requires 2x6 stud construction.

Refer to manufacturer and local codes for flush valve requirements.

Refer to the K-4744 bidet seat specification sheet for additional information.

In-wall tank and carrier system install in wall opening 5-1/2″ (140 mm) x 19″ (483 mm) x 50″ (1270 mm) minimum.
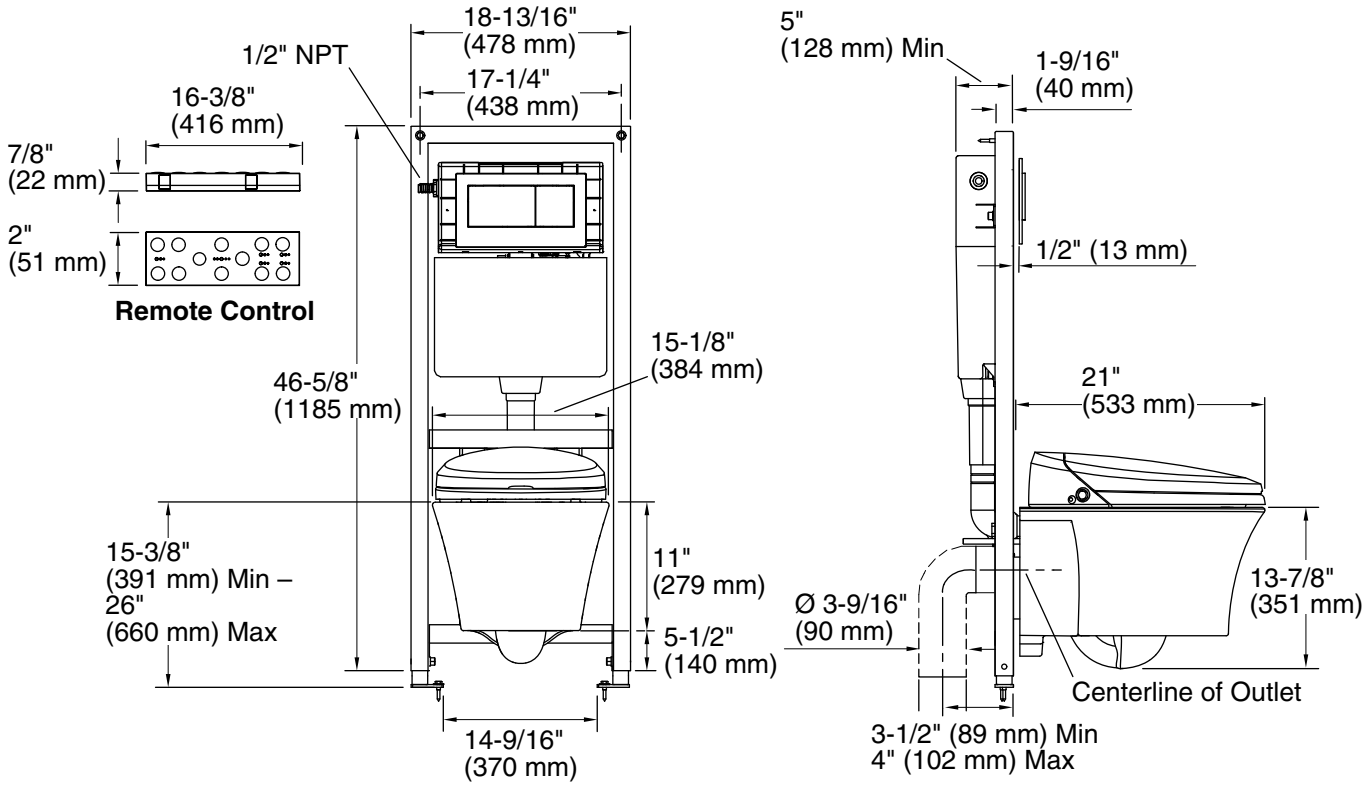
Fixture conforms to ASME standard A112.19.2/CSA B45.1. All dimensions are nominal.