KOHLER®

Roughing-In

K-842-H2, K-845-H2
MAESTRO™
BATH WHIRLPOOL

Product Information

Applicable products:	
Bath whirlpool with grip rails	K-842-H2
Bath whirlpool, less grip rails	K-845-H2
ADA compliant when installed per Section 607 of the Act.	ADA

Fixture*:	
Bathing well:	
Basin area, bottom	47″ (119.4 cm) x 21″ (53.3 cm)
Basin area, top	57″ (144.8 cm) x 25″ (63.5 cm)
Weight	420 lbs (190.5 kg)
To overflow:	
Water depth	13″ (33 cm)
Capacity	55 gal (208.2 L)
* Approximate measurements for comparison only.	

Pump	kW	V	A*
	1.5	240	11
* Approximate measurements for comparison only.			

Drop-in cut-out	64-1/4″ (163.2 cm) x 30-1/2″ (77.5 cm)

Cut-out for undermount (K-845-H2)	K-585 template

Required accessories:	
Grip rails (pair) - required for K-842-H2	K-9621
Jet trim kit	K-9695

Required Electrical Service

Dedicated circuit required, protected with Class A Ground-Fault Circuit-Interrupter (GFCI) or Residual Current Device (RCD):	
Pump/control	208-240 V, 20 A, 50/60 Hz

Installation Notes

Install this product according to the installation guide.

Cast iron whirlpools are extremely heavy, making some drop-in installations difficult. Splitting the deck/surround is recommended if installing into a deck.

Floor support under whirlpool must provide for a minimum of 62 lbs/square foot (301 kg/square meter) loading.

Fixture conforms to ASME Standard A112.19.1. All dimensions are nominal.

No change in measurements if connected with drain illustrated. (K-7161-AF or K-7161M-AF)
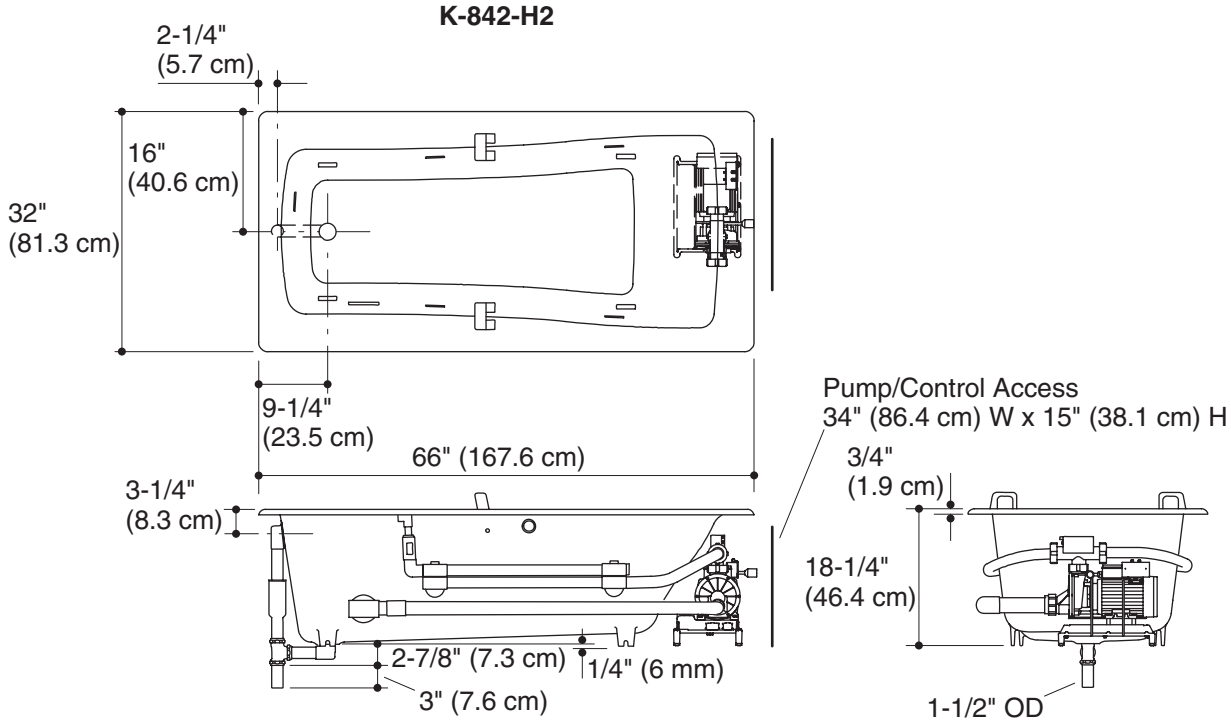
K-842-H2