KOHLER®

Roughing-In

K-1167-H2
UNDERSCORE®
BATH WHIRLPOOL WITH HEATER

Product Information

Applicable product:	
Bath whirlpool with heater	K-1167-H2

Fixture*:	
Bathing well:	
Basin area, bottom	42-3/8″ (1076 mm) x 20″ (508 mm)
Basin area, top	54-3/8″ (1381 mm) x 24-5/16″ (618 mm)
Weight	121 lbs (55 kg)
To overflow:	
Water depth	15-1/16″ (383 mm)
Capacity	59.8 gal (226 L)
* Approximate measurements for comparison only.	

Drop-in cut-out	59-1/2″ (1511 mm) x 28-1/2″ (724 mm)

Pump	kW	V	Hz	A
Variable-speed	1.5	240	50/60	11

Required accessories:	
Clearflo slotted overflow brass bath drain **OR**	K-7271
Clearflo slotted overflow bath drain – PVC pipe	K-7272
Jet trim kit	K-9698

Required Electrical Service

Dedicated circuit required, protected with Class A Ground-Fault Circuit-Interrupter (GFCI) or Residual Current Device (RCD):	
Pump/control:	220-240 V, 20 A, 50/60 Hz

Installation Notes

Install this product according to the installation guide.

Will comply with **ADA** when installed per Section 607 Bathtubs of the Act.

Floor support under bath must provide for a minimum of 52 lbs/square foot (254 kg/square meter) loading.

Hot water supply should be 70% of capacity or greater. Installations will vary.
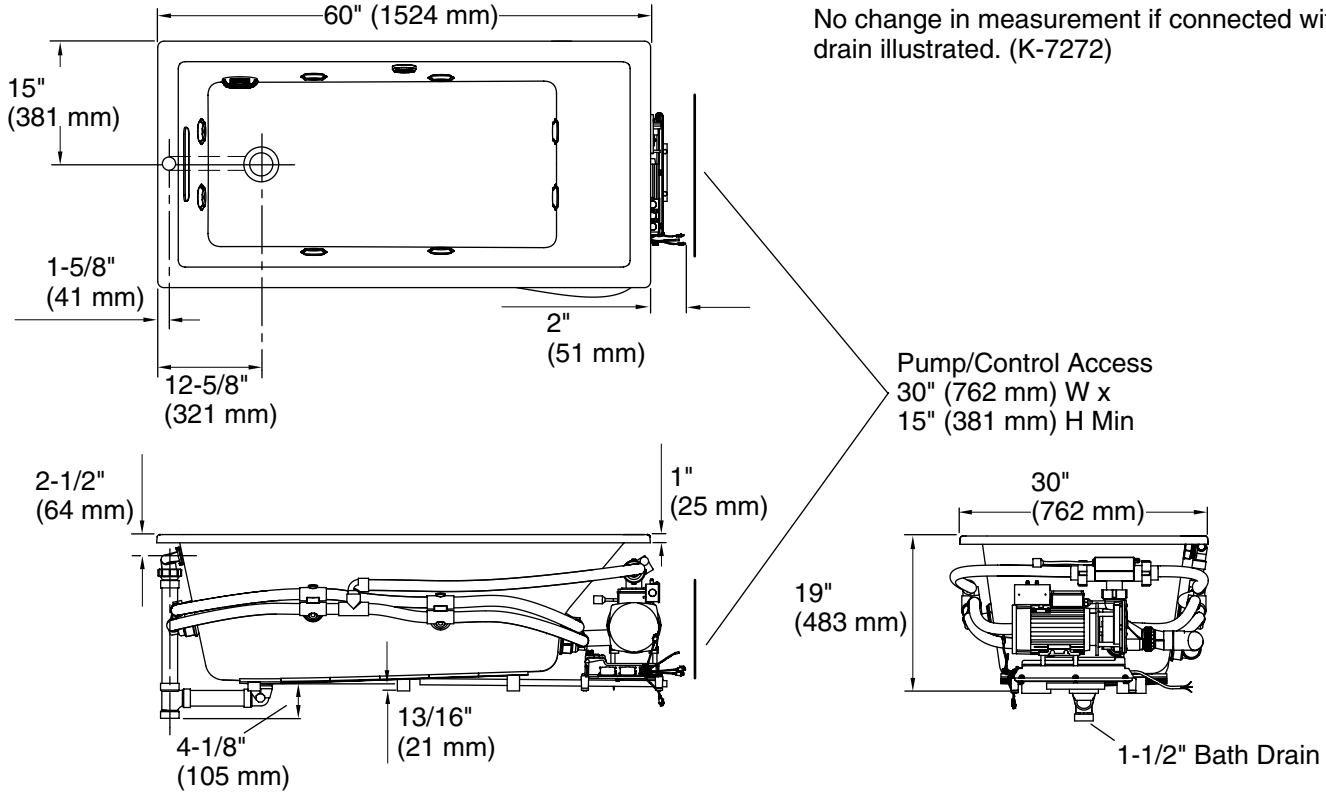
Fixture conforms to ANSI Standards Z124.1.2. All dimensions are nominal.