KS8661,2,5,8CQL
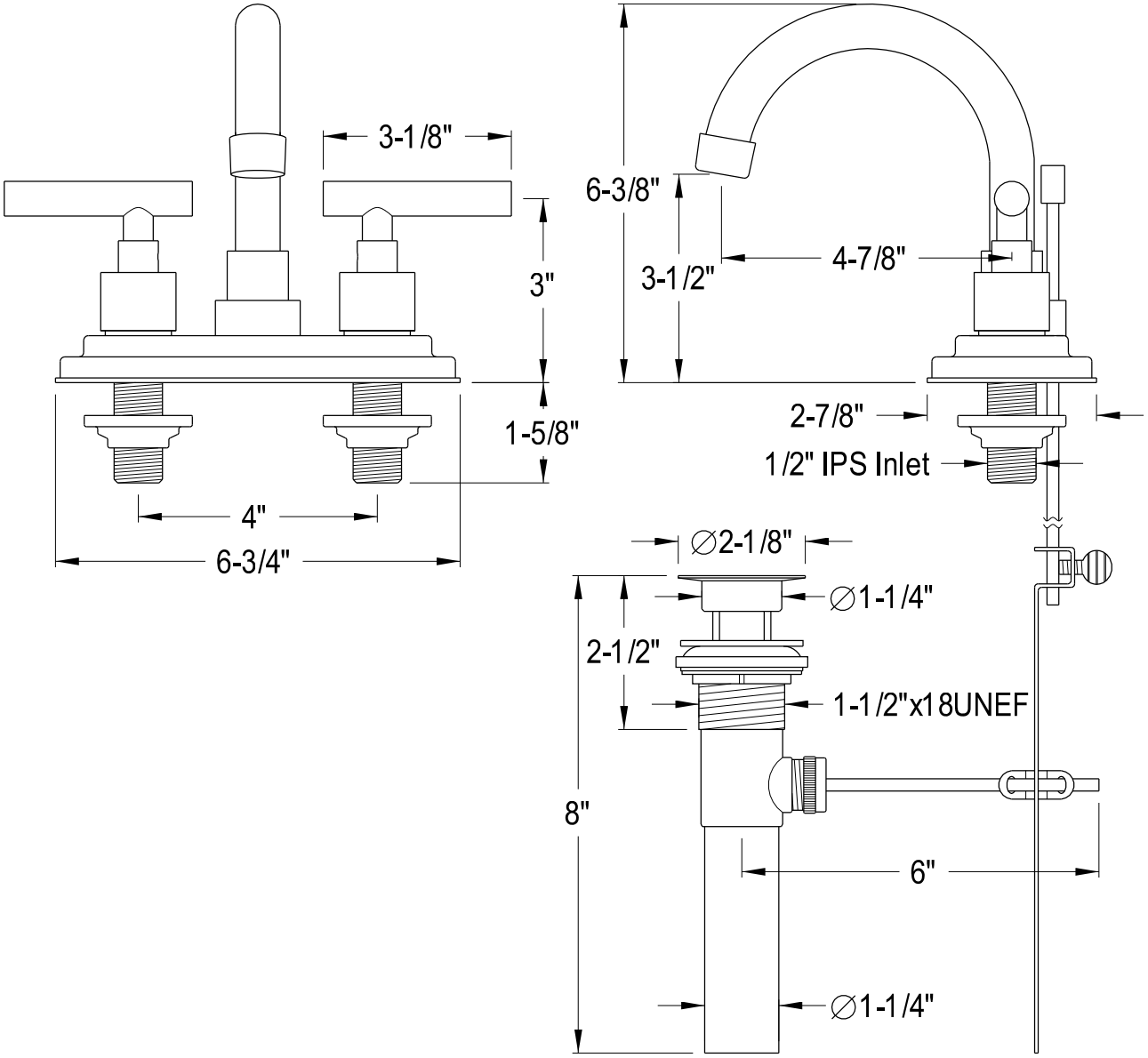
Claremont 4" Lavatory Faucet With Brass Pop-Up