Wide Spread Lavatory Faucet , With Brass Pop-up
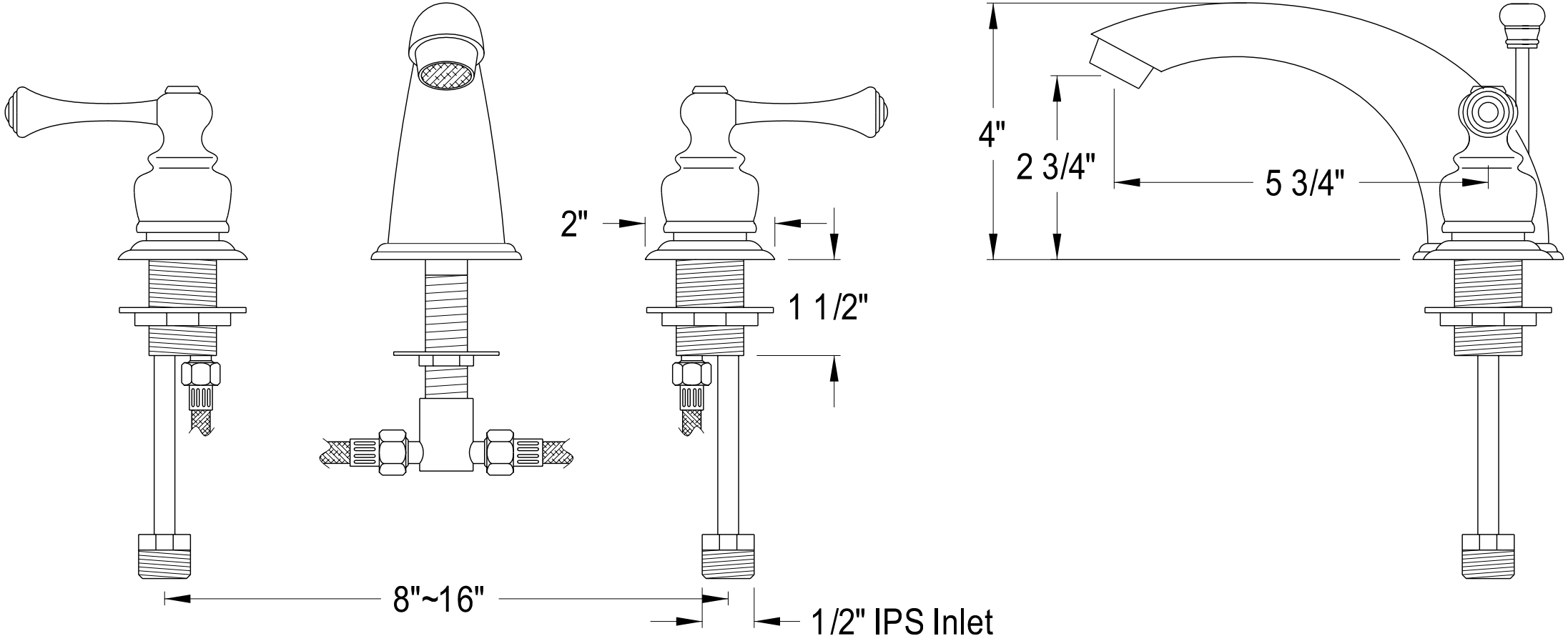
Model No.	Finish
KB3971BL	Chrome
KB3972BL	Polished Brass
KB3975BL	Oil Rubbed Bronze
KB3978BL	Satin Nickel