Product data sheet (PDF)

Axor Bouroullec
HG wash basin Axor Bouroullec 666mm

Description

. Mineral cast with durable gel coat finish
. Includes installation equipment kit
. Only install with faucet without pop-up
. Recommended drill bit # 19994000
. Recommended drain # 50001001
. Weight: 48 lbs.
. Pre-Drilled options 19942110, 19942230, 19942330

Finishes	Art. no.	Price excl. VAT
alpin-white	19942000	1.098,00 $

Product image
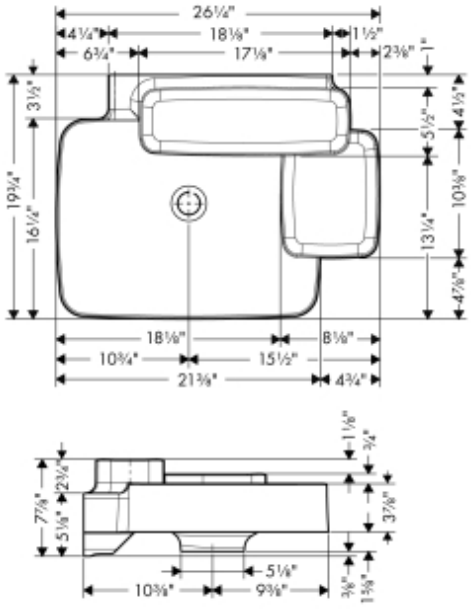
Scale drawing