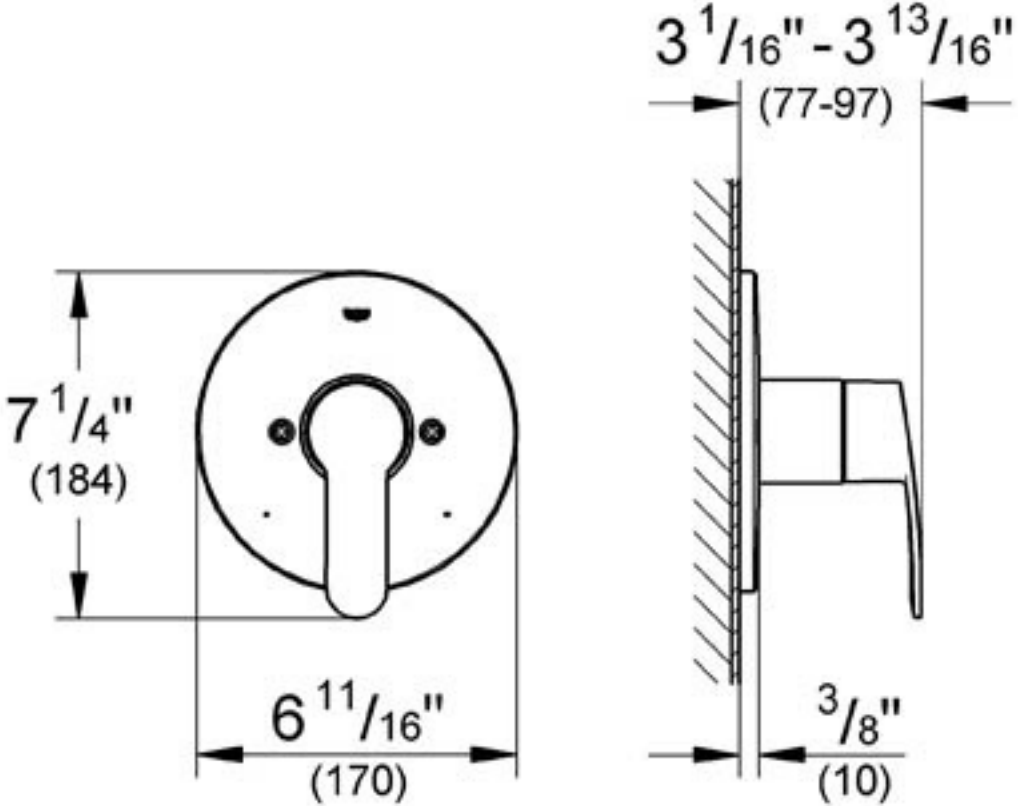
3 1/16" - 3 13/16"
(77-97)
7 1/4"
(184)
6 11/16"
(170)
3/8"
(10)