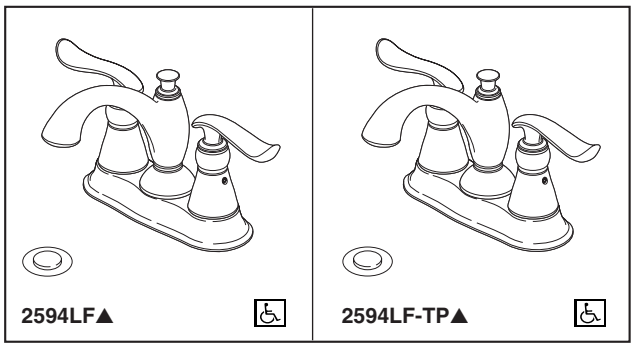

Submitted Model No.:_____

Specific Features:_____

LAVATORY FAUCETS

- Linden™ Collection
- Two Handle Deck Mount
- 3 Hole Sink Applications
- 4" Centerset

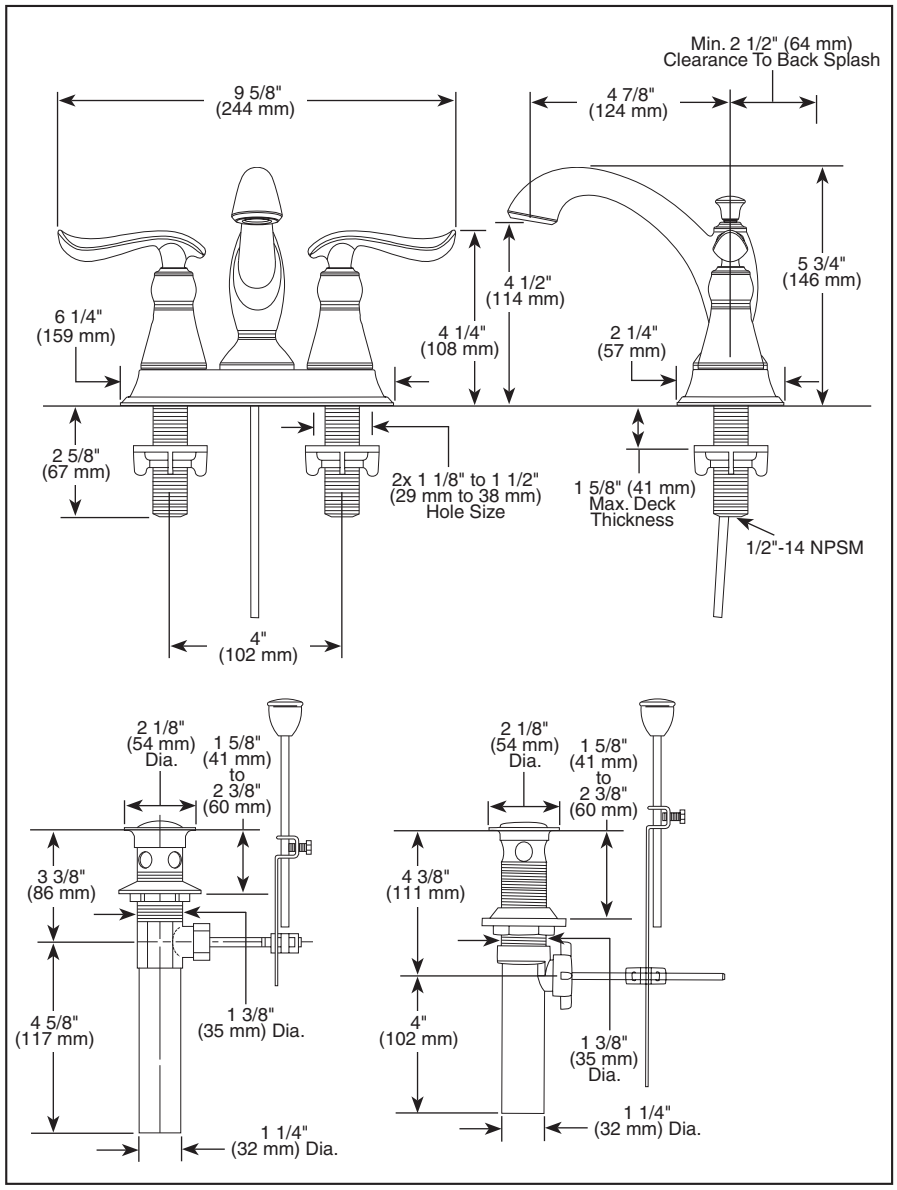

▲ Designate Proper Finish Suffix

STANDARD SPECIFICATIONS:

- Solid brass spout.
- 4" (102 mm) centerset.
- 4 7/8" (124 mm) long, 5 3/4" (146 mm) high rigid spout.
- 1/4 turn handle stops.
- Control mechanism is a rotating cylinder type with stainless steel plate and 90˚ rotation, with replaceable non-metallic seats operating in stainless steel lined sockets.
- Hot and cold stems are interchangeable.
- 1/2"-14 NPSM threaded male inlet shanks.
- Models without "TP" suffix have metal drain with pop-up type fitting with plated flange and stopper.
- Models with "TP" suffix have polypropylene pop-up type drain fitting with plated metal flange and stopper cap.
- Maximum 1.5 gpm flowrate @ 60 PSI.

WARRANTY

- Lifetime Faucet and Finish Limited Warranty to the original consumer purchaser to be free from defects in material and workmanship.
- 5 Year Limited Warranty for usage in all industrial, commercial and business applications.

COMPLIES WITH:

- ASME A112.18.1 / CSA B125.1
- ASME A112.18.2 / CSA B125.2
- Indicates compliance to ICC/ANSI A117.1
- EPA Water Sense
- Verified compliant with .25% weighted average Pb content regulations.

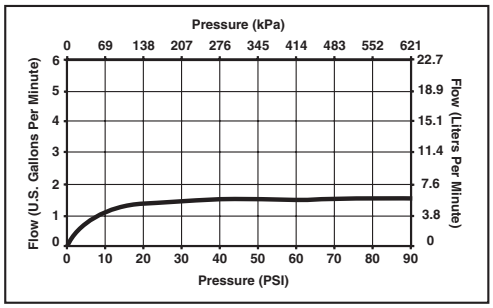

DELTA FAUCET COMPANY

55 E. 111th Street, Indianapolis, Indiana 46280
350 South Edgeware Road, St. Thomas, ON N5P 4L1
© 2011 Masco Corporation of Indiana

Delta reserves the right (1) to make changes in specifications and materials, and (2) to change or discontinue models, both without notice or obligation. Dimensions are for reference only. See current full-line price book or www.specselect.com for finish options and product availability.

DSP-L-2594LF Rev. A