SPECIFICATIONS

SIRIUS™ TRIM LINE TWO HANDLE WIDESPREAD LAVATORY FAUCET

Model

D328544

Description

- Ceramic disc valves
- 7 ½" high spout, 5 ½" spout length
- With drain assembly
- Hot and cold markings on handles
- 3 hole mount, 4" - 12" installation
- A112.18.1M, 1.5 gpm (5.7 LPM) maximum flow rate @ 20 - 80 psi

Standards

NSF Certified to NSF/ANSI 61 Section 9

- NSF 61-9
- Energy Policy Act of 1992

UPC NSF/ANSI 372

- ASME A112.18.1M/A112.18.1
- NSF/ANSI 372

- ADA Accessibility Guidelines for Buildings and Facilities - 4.27.4 Controls and Mechanisms

Warranty

Danze products are covered by a manufacturer's limited "lifetime" warranty for manufacturing defects.

Flow Rate

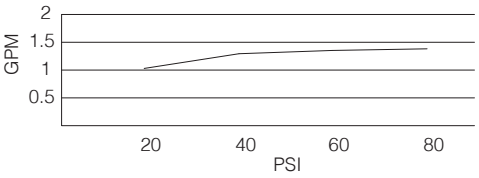

WaterSense Meets EPA Criteria
Certified by IAPMO R&T

Finishes Available

- Chrome
- Other: Refer to Price List for additional finish

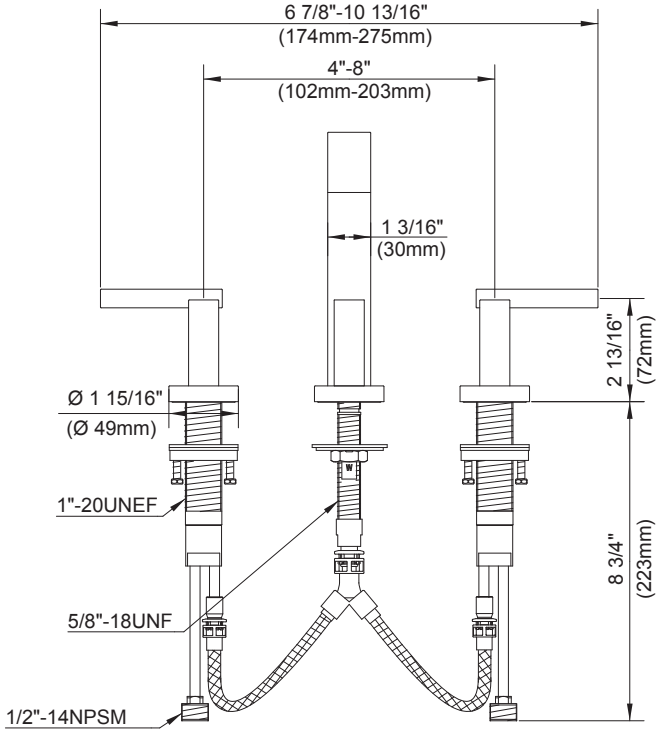

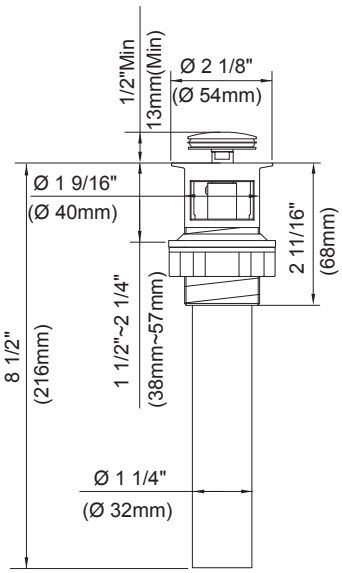

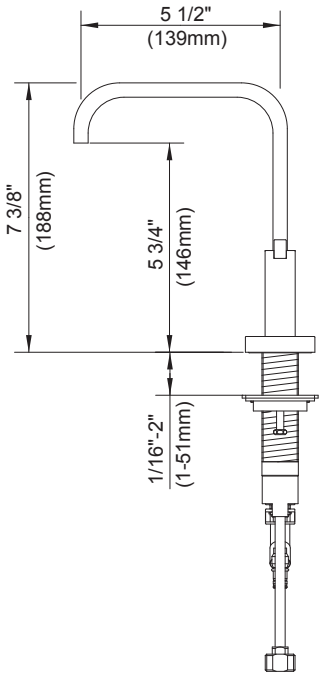

Submittal Information:

Job Name: _____ *Location:* _____

Contractor: _____ *Contact #:* _____