SPECIFICATIONS

EASTHAM™ TWO HANDLE CENTERSET LAVATORY FAUCET

Model

D301015

Description

- Ceramic disc valves
- 6 ¾" high spout , 4 ½" spout length, laminar flow
- 50/50 pop-up drain assembly
- 3 hole mount
- Flow rate: 1.5 gpm @ 60 psi

Standards

Certified to NSF/ANSI 61 Section 9

- NSF 61-9
- Energy Policy Act of 1992

NSF/ANSI 372

- ASME A112.18.1M/A112.18.1
- NSF/ANSI 372

- ADA Accessibility Guidelines for Buildings and Facilities - 4.27.4 Controls and Mechanisms

Warranty

Danze products are covered by a manufacturer's limited "lifetime" warranty for manufacturing defects.

Flow Rate

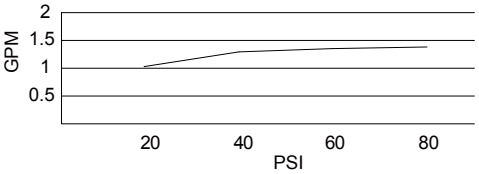

WaterSense Meets EPA Criteria

Certified by IAPMO R&T

Finishes Available

- Chrome
- Other: Refer to Price List for additional finish

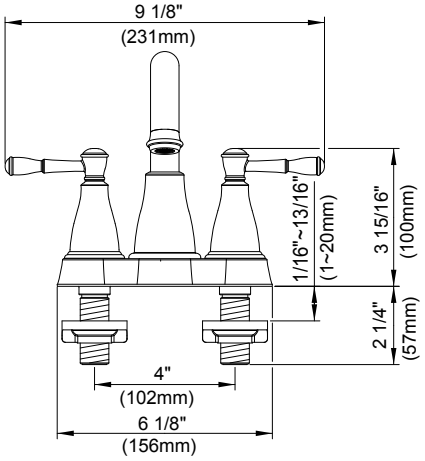

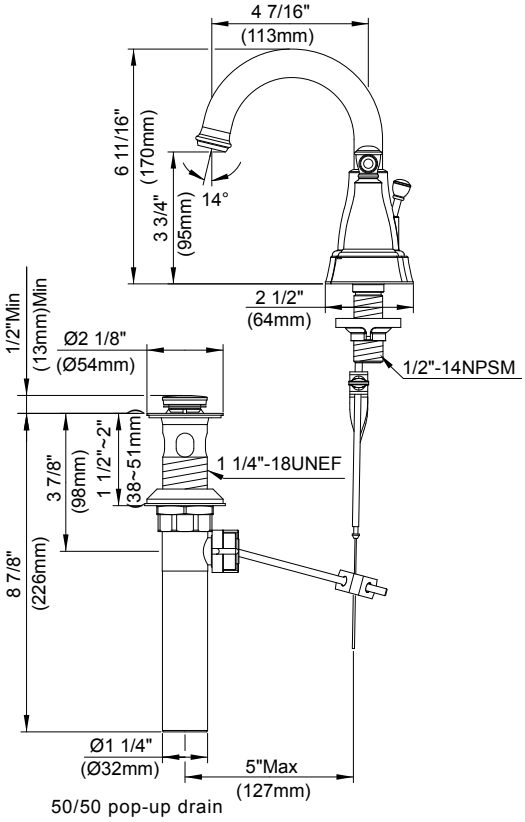

Submittal Information:

Job Name: _____ *Location:* _____

Contractor: _____ *Contact #:* _____