COMPLIES WITH:
ANSI/ASME A112.18.1
CSA B125
IAPMO Listed
CSA Certified
ICC/ANSI A117.1/ADA

CSA B125
ASME A112.18.1
ICC/ANSI A117.1

Model 6115080 Shown

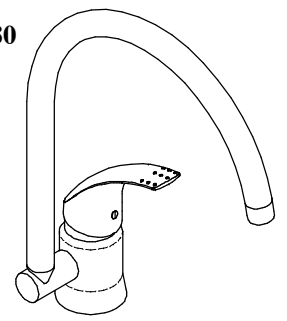

KITCHEN FAUCETS

- Riviera®Single Handle
- 1 Hole Applications

Submitted Model No.: _____

Specific Features: _____

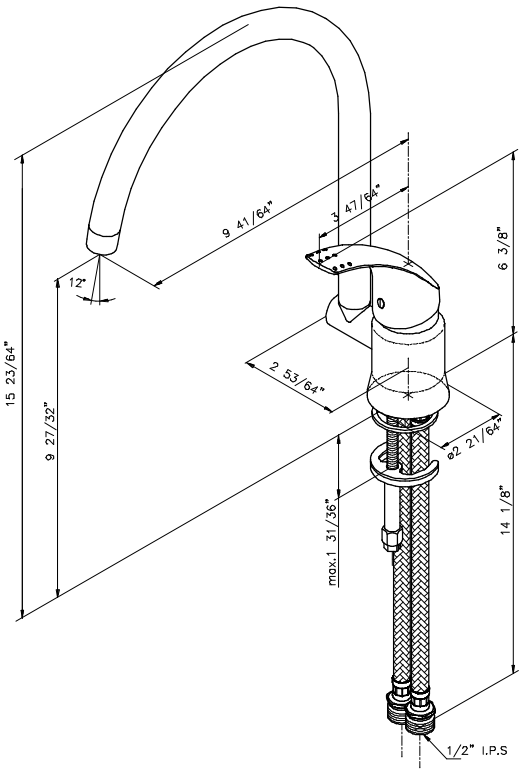

STANDARD SPECIFICATIONS

- Single handle kitchen faucet for concealed mounting on 1 hole applications.
- Control mechanism shall be of the rotating stainless steel ball type, with replaceable non-metallic seats.
- Recommend 1 1/4" hole size.

Metric Conversion Chart															
Gals./ Min	0.5	1.0	1.5	2.0	2.5	3.0	10.0	10.5	12.0	17.5	18.0	19.0	psi	60.0	80.0
Ltrs./ Min	1.9	3.8	5.7	7.6	9.5	11.4	38.0	40.0	45.0	66.0	68.0	72.0	kPa	414	551

AVAILABLE FINISHES

Suffix	Finish
BN	Brilliance® Brushed Nickel
PC	Polished Chrome

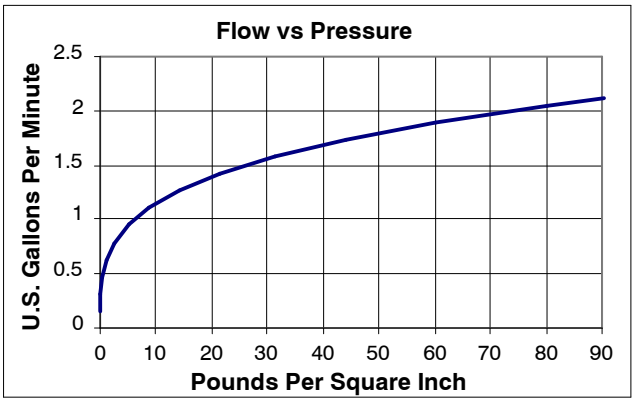

Standard Features	
Washerless	◆
Flexible connection hoses	◆
1/2" I.P.S. Adapters	◆

BRIZO™