SINK SPECIFICATIONS

SILGRANIT®II
BLANCO PRECIS™ 1-3/4 BOWL Undermount
Model 441128

FEATURED MODEL

441128 1-3/4 Bowl, 9-1/2" bowl depths, ANTHRACITE

ADDITIONAL MODELS

441125 1-3/4 Bowl, 9-1/2" bowl depths, WHITE
441127 1-3/4 Bowl, 9-1/2" bowl depths, BISCUIT
441129 1-3/4 Bowl, 9-1/2" bowl depths, CAFE BROWN
441130 1-3/4 Bowl, 9-1/2" bowl depths, METALLIC GRAY
441296 1-3/4 Bowl, 9-1/2" bowl depths, TRUFFLE
441298 1-3/4 Bowl, 9-1/2" bowl depths, BISCOTTI
441479 1-3/4 Bowl, 9-1/2" bowl depths, CINDER

FEATURES

- Required outside cabinet: 36"
- 80% solid granite
- Heat resistant up to 536°F
- Unsurpassed cleanability backed by industry leading 7 patents!
- Resistant to scratches, stains and all household acids and alkali solutions
- Template provided with approximate 1/8" reveal
- Undermount clips included
- Limited lifetime warranty

OPTIONAL ACCESSORIES

Cutting Board:	516334
Colander:	513520
Sink Grids:	516364 (left), 516366 (right)

CODE/STANDARDS COMPLIANCE

ANSI Z124.6-97
IAPMO/UPC listed

WARRANTY

BLANCO'S SILGRANIT II Series sinks feature a LIMITED LIFETIME WARRANTY to be free of all manufacturing defects under normal use. See our complete warranty for details.

While BLANCO endeavors to provide accurate information, all dimensions are nominal, cannot be guaranteed, and are subject to change or cancellation. BLANCO assumes no responsibility for use of superseded or voided specifications.

JOB INFORMATION

Job Name: _____

Contact: _____

Date Specified: _____

Specifier: _____

Contractor: _____

NOMINAL DIMENSIONS

Model 441130 shown

OVERALL	CUT OUT SIZE	BOWL DEPTHS LEFT	BOWL DEPTHS RIGHT	DRAIN
33" x 18"	Template provided with approximate 1/8" reveal	9-1/2"	9-1/2"	3-1/2"

DXF cutout templates available on our website.

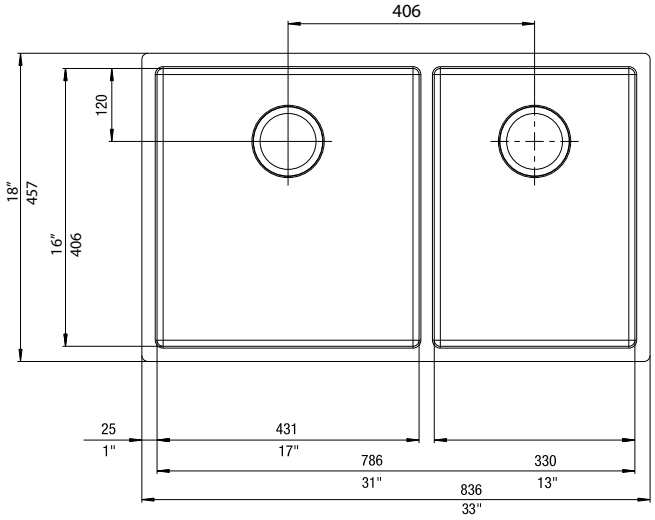

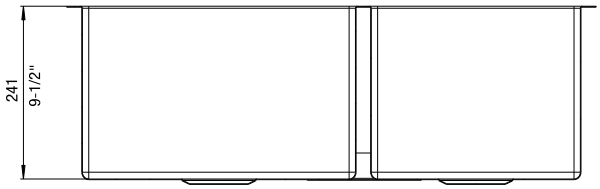

BLANCO AMERICA
800.451.5782
www.blancoamerica.com

© 2013 BLANCO AMERICA