American Standard
Style That Works Better

NEW SAVONA™ ELONGATED ONE-PIECE TOILET
VITREOUS CHINA

NEW SAVONA™ ELONGATED ONE-PIECE TOILET

❑ **2097.012**
- Vitreous china
- **LXP (Luxury Performance) Toilet**
- Low-consumption (6.0 Lpf/1.6 gpf)
- Elongated siphon action bowl with smooth-sided, concealed trapway
- Sleek one-piece Easy-Clean™ design eliminates crevices and squared corners
- Rim height at 381mm (15")
- Fully glazed 2" trapway
- Oversized 3" flush valve with chemically resistant flapper
- Fitted tank cover
- Color-matched trip lever on right hand side
- 2 color-matched bolt hole covers
- Includes color-matched solid plastic slow-close toilet seat with concealed seat ring
- 100% factory flush tested
- **Part of Savona Suite of design-matched fixtures**
- 10 year warranty on entire toilet

Nominal Dimensions:
736 x 413 x 767mm
(29" x 16-1/4" x 30-1/4")

Fixture only, supply by others

Compliance Certifications -
Meets or Exceeds the Following Specifications:
- ASME A112.19.2-2008 / CSA B45.1-08
- Los Angeles Department of Water and Power Supplementary Purchase Specification For Non-Adjustability

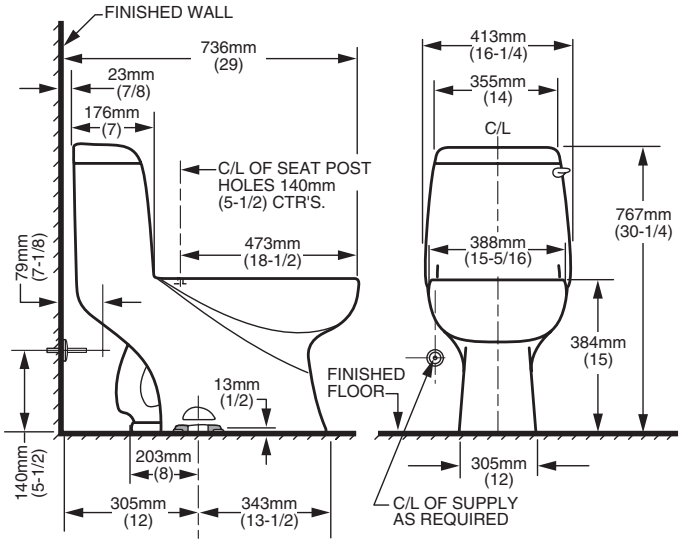

To Be Specified:
❑ Color:
❑ White ❑ Bone ❑ Linen
❑ Supply with Stop:

NOTES:
THIS TOILET IS DESIGNED TO ROUGH-IN AT A MINIMUM DIMENSION OF 305MM (12") FROM FINISHED WALL TO C/L OF OUTLET.
SUPPLY NOT INCLUDED WITH FIXTURE AND MUST BE ORDERED SEPARATELY.
* DIMENSION SHOWN FOR LOCATION OF SUPPLY IS SUGGESTED.

IMPORTANT: Dimensions of fixtures are nominal and may vary within the range of tolerance established by ANSI Standard A112.19.2
These measurements are subject to change or cancellation. No responsibility is assumed for use of superseded or voided pages.

© 2009 AS America Inc.