Avallon Pro

Kitchen Faucet

SM-KF79BG

Features:

- Double-handle control
- Durable brass
- Side sprayer
- 2.0 GPM flow rate

Colors & Finishes:

- Chrome: SM-KF79C
- Brushed Nickel: SM-KF79BN
- Brushed Gold: SM-KF79BG
- Matte Black: SM-KF79MB
- Matte White: SM-KF79MW

Specifications:

- N.W: 8.5 lb.
- L: 8 3/8" x W: 1 5/8" x H: 12 3/16"

Included Parts:

- Kitchen Faucet: SM-KF79BG

Compatible Parts (sold separately):

- Swiss Madison Kitchen Sink*
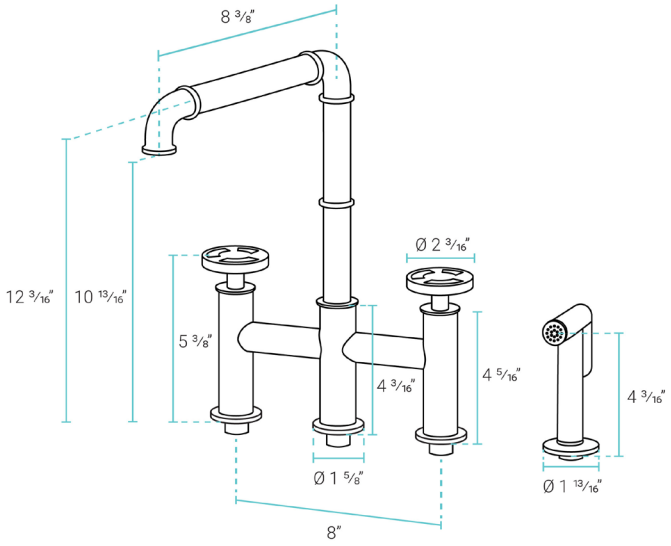
* Style and color options available