SPEAKMAN® SE-575-DP

Laboratory ADA Compliant Swing Activated Eye/Face Wash with Drain Pan

FEATURES:

- Recessed, wall-mounted
- (2) yellow/black, plastic, soft sprays
- Brass, chrome-plated valve
- Swing activated
- ½ in. NPT female inlet
- Stainless Steel with satin finish cabinet
- Stainless Steel with satin finish door
- 3.9 gpm @ 30 psi
- Universal emergency sign included

FINISHES:

Stainless Steel

COMPLIANCE:

- Certified to ANSI/ISEA Z358.1

OPTIONS:

Add suffix to model #

- In-line strainer ❑ -ILS
- P-trap ❑ -PT

WARRANTY:

- 3 year limited

Architect/Engineer Approval Space:

SPEAKMAN
400 ANCHOR MILL ROAD
NEW CASTLE, DE 19720

P: 800-537-2107
F: 800-977-2747
W: WWW.SPEAKMAN.COM
R: MARCH 2017

DIMENSIONS:

NOTE: 1. All dimensions are in inches (millimeters) unless otherwise specified and are subject to change without notice.

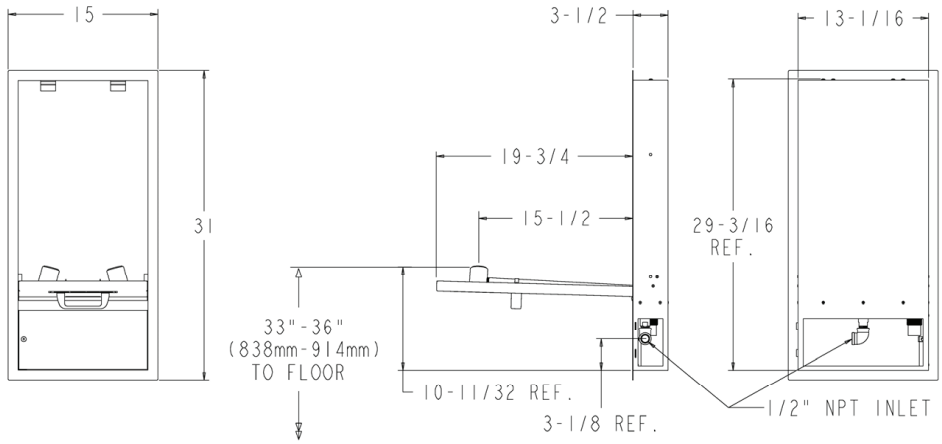

Architect/Engineer Approval Space:

SPEAKMAN
400 ANCHOR MILL ROAD
NEW CASTLE, DE 19720

P: 800-537-2107
F: 800-977-2747
W: WWW.SPEAKMAN.COM
R: MARCH 2017