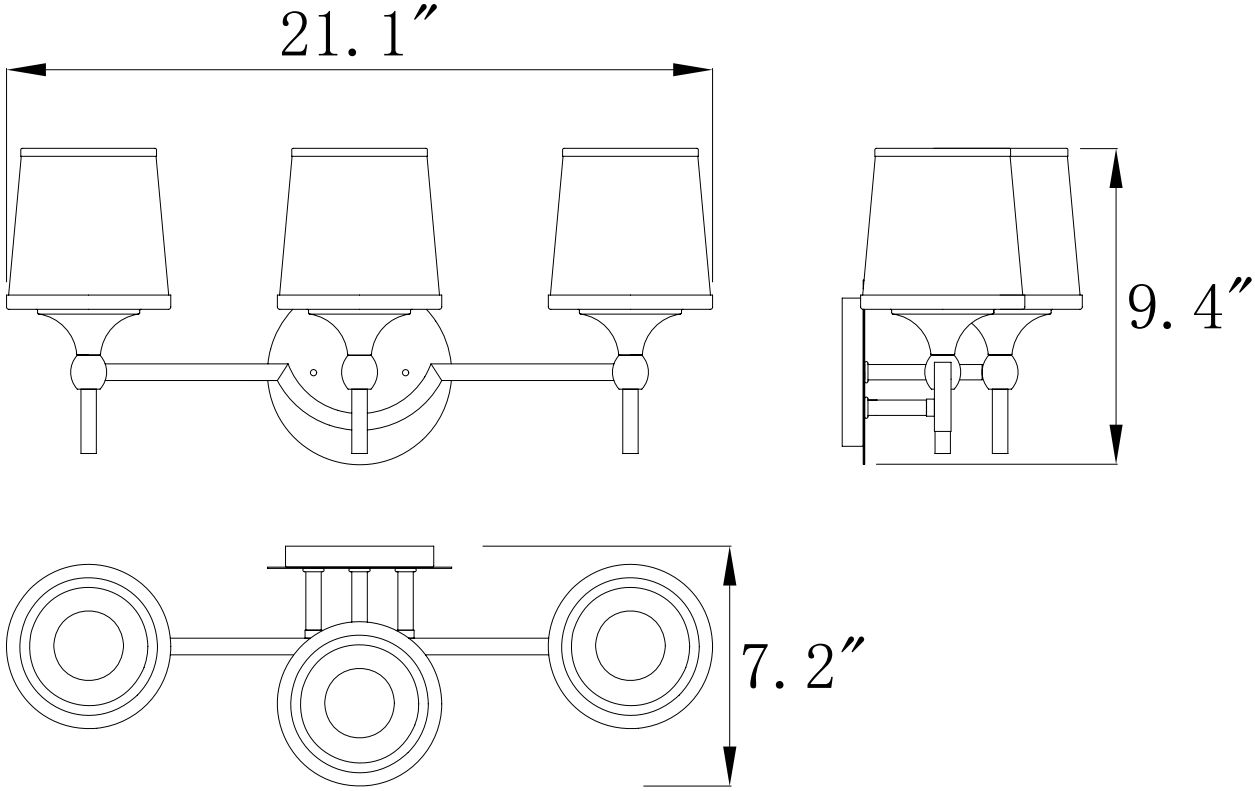8-4385-3