ROHL

Authentic Luxury for Kitchen and Bath™

www.rohlhome.com

Verona 3-Hole Deck Mount Tub Filler

ROHL Country Bath Collection

A2784LM (Verona Metal Levers)
A2784XM (Verona Cross Handles)

FEATURES

- Fixed spout
- 1/4-turn ceramic valves
- 3 x 1 3/8" cutouts
- 8 1/32" spout reach
- 5 29/32" spout height
- Matching lav set A2707XM
- 10-13 GPM at 45 PSI
- 1/2" NPT connectors
- Solid brass

COLORS/FINISHES

- Polished Chrome
- Polished Nickel
- Satin Nickel
- Tuscan Brass
- Inca Brass
- Antico Brass

WARRANTY

- Limited Lifetime*

*No warranty on Tuscan Brass finish

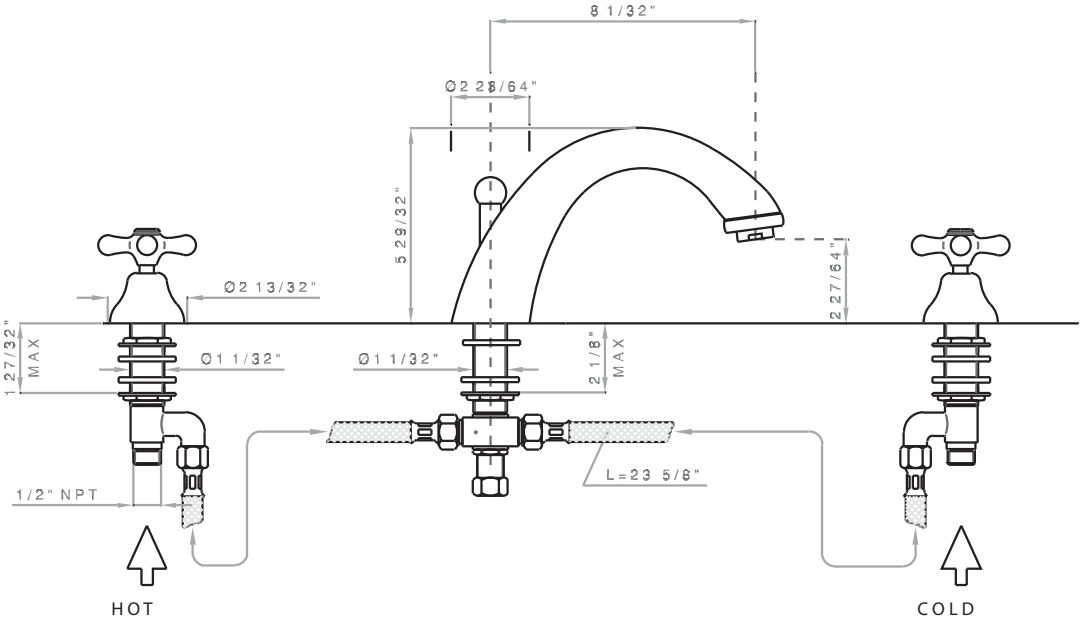

A2784XM

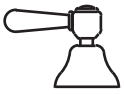

A2784LM

Consult your local ROHL showroom for additional information and specifications. For complete warranty details and a list of showrooms, go to www.rohlhome.com.

ROHL

Authentic Luxury for Kitchen and Bath™

www.rohlhome.com

A2784 Spare Parts

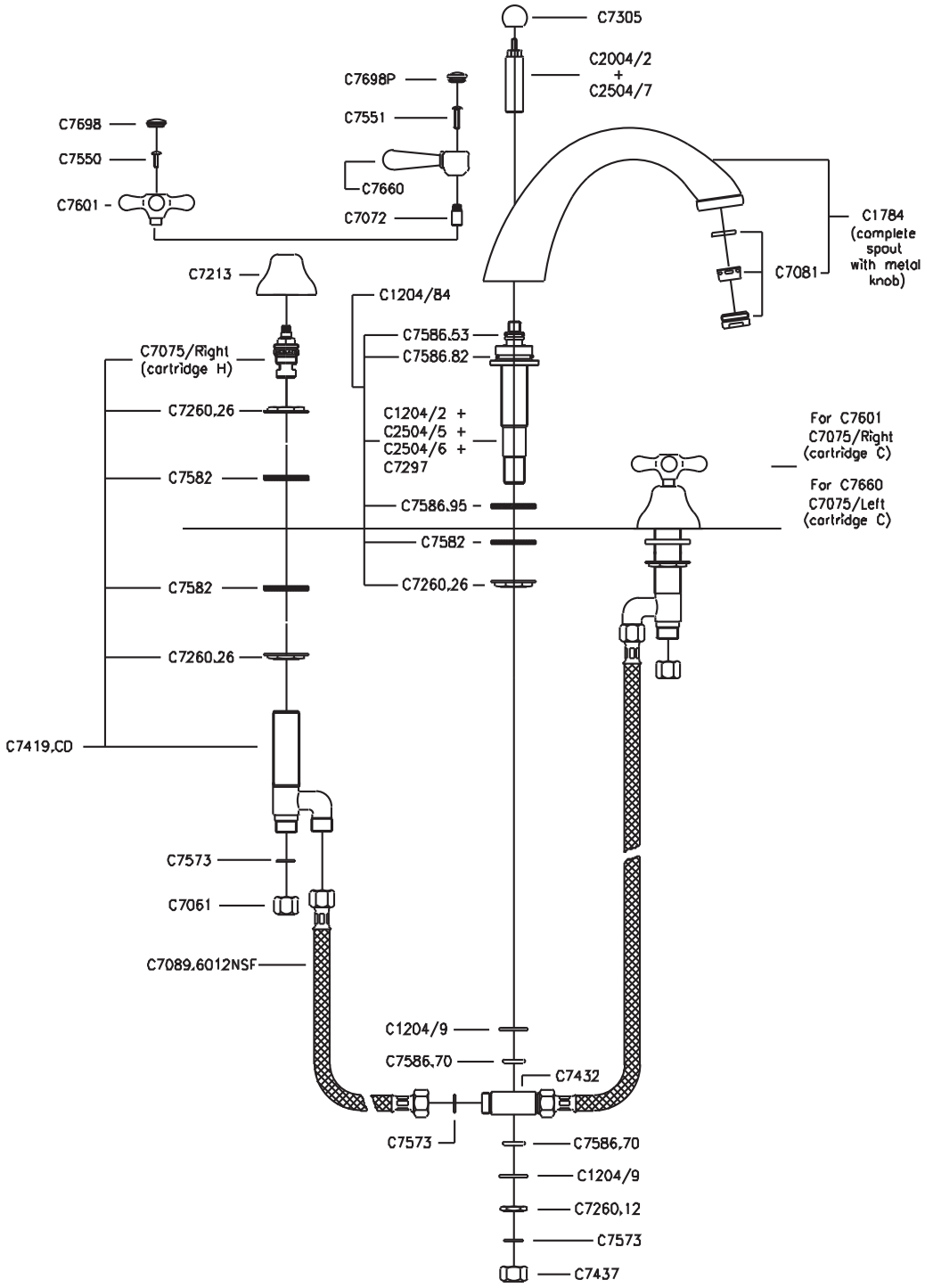

Consult your local ROHL showroom for additional information and specifications. For complete warranty details and a list of showrooms, go to www.rohlhome.com.