Riobel® | PERRIN & ROWE® MAYFAIR LONDON | ROHL®

INSTRUCTION MANUAL

MANUEL D'INSTRUCTIONS

MANUAL DE INSTRUCCIONES

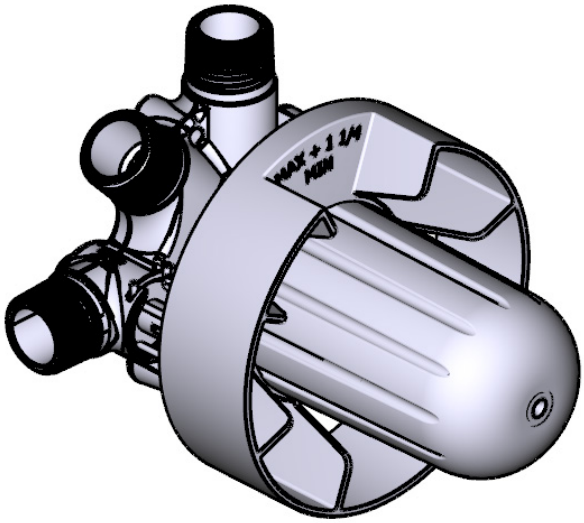

R45, 3-way Type T/P
(thermostatic/pressure balance)
coaxial valve rough

R45, Brut de valve 3 voies coaxiale,
Type T/P (thermo/pression équilibrée)

Válvula coaxial de 3 vías tipo T/P
(termostática/equilibrio de presión) R45

HELPFUL TOOLS
For safety and ease of installation, the use of these helpful tools is recommended.

OUTILS UTILES
Pour des raisons de sécurité et de facilité d'installation, l'utilisation de ces outils utiles est recommandée.

HERRAMIENTAS ÚTILES
Por seguridad y facilidad de instalación, se recomienda el uso de estas útiles herramientas.

Safety Glasses
Lunettes de sécurité
Gafas de seguridad

Thread Seal Tape
Ruban d'étanchéité pour joints filetés
Cinta de teflón

Flathead Screwdriver
Destornillador de punta chata
Tournevis à tête plate

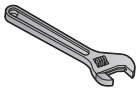
Adjustable Wrench
Clé adjustable
Llave ajustable

Parts List

A. Valve
B. Valve Cover
C. Plaster Ground
D. Service Valve
Note: Not a stop valve (may not shut off water completely)

Liste des pièces

A. Valve
B. Couvercle de la valve
C. Gabarit d'installation
D. Valve de service
Remarque : Il ne s'agit pas d'une valve d'arrêt (elle ne peut couper entièrement l'alimentation en eau)

Lista de piezas

A. Válvula
B. Cubierta de la válvula
C. Protector de válvula
D. Válvula de servicio
Nota: No es una válvula de cierre (podría no cerrar el suministro de agua completamente)

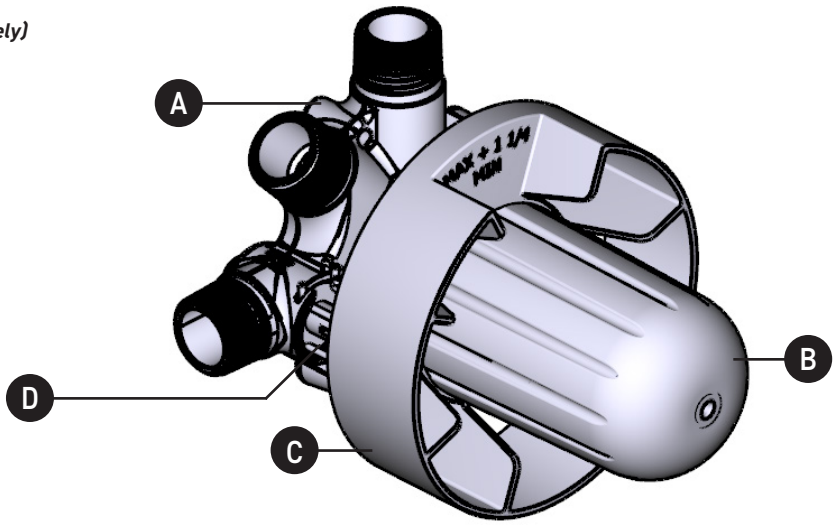

Standard Wall / Mur standard / Pared estándar

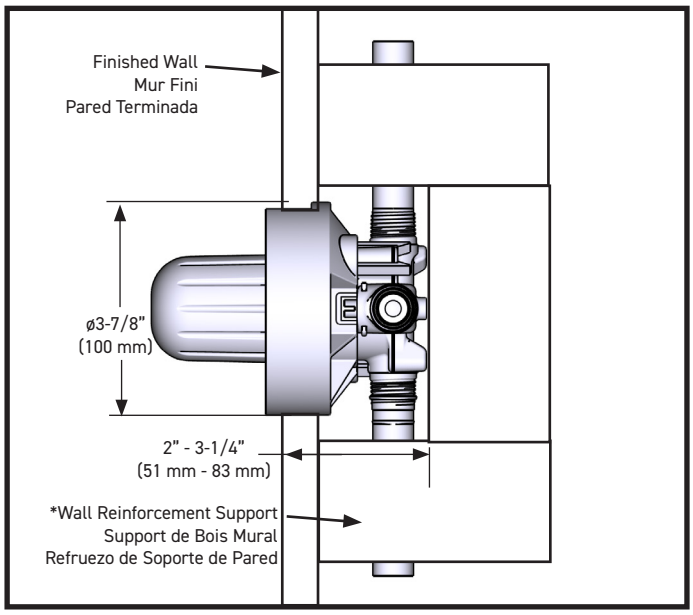

Acrylic Wall/Mur en Acrylique/Pared de Acrílico

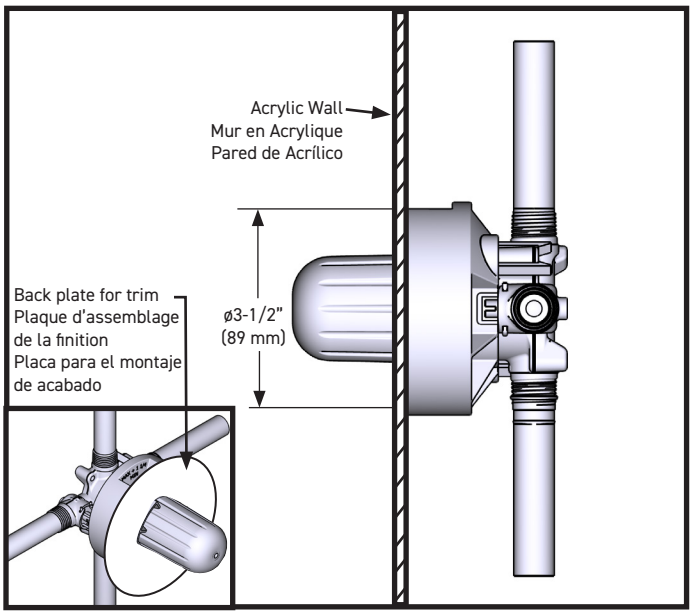

CAUTION — TIPS FOR REMOVAL OF OLD FAUCET:
Always turn water supply OFF before removing existing faucet or disassembling the valve. Open faucet handle to relieve water pressure and ensure that complete water shut-off has been accomplished.

ATTENTION — CONSEILS POUR LE RETRAIT DE L'ANCIEN ROBINET:
Toujours couper l'alimentation en eau avant de retirer ou de démonter le robinet. Ouvrir le robinet pour libérer la pression d'eau et pour s'assurer que l'alimentation en eau a bien été coupée.

PRECAUCIÓN — CONSEJOS PARA CAMBIAR LA LLAVE MEZCLADORA:
Siempre CIERRE la toma de agua antes de quitar la llave existente o desmontar la válvula. Abra la llave para liberar la presión, y asegúrese de que esté bien cerrada el agua.

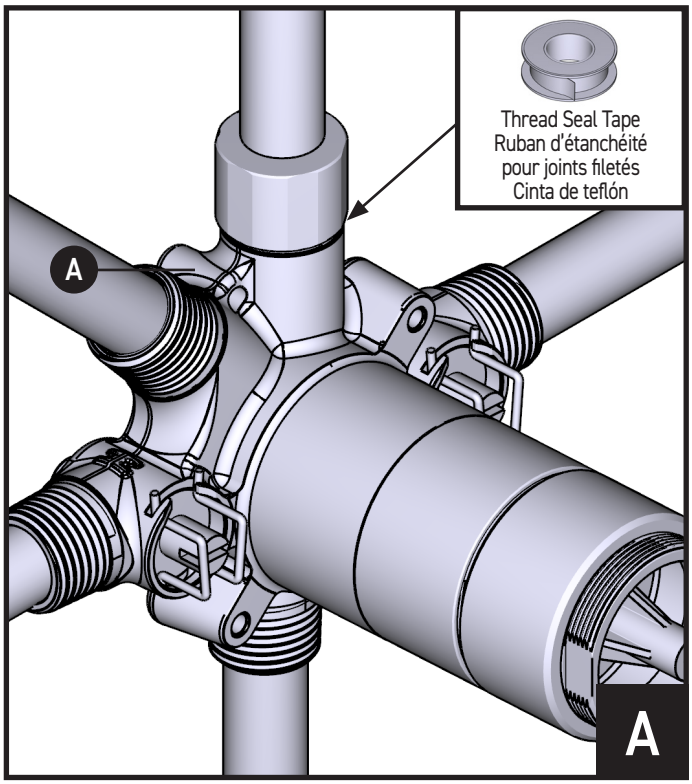

1. Apply 15-20 turns of Thread Seal Tape to threads of Valve **(A).**
2. Installation shows Male NPT type. Tighten with wrench.

1. Faire de 15 à 20 tours avec le ruban pour joint fileté autour des filets de la valve **(A)**.
2. L'illustration montre une installation effectuée au moyen d'un raccord mâle de type NPT. Serrer le tout avec une clé.

1. Aplique 15-20 vueltas de cinta de teflón a la rosca de la válvula **(A)**.
2. La instalación muestra una conexión macho de tipo NPT. Apriete con una llave.

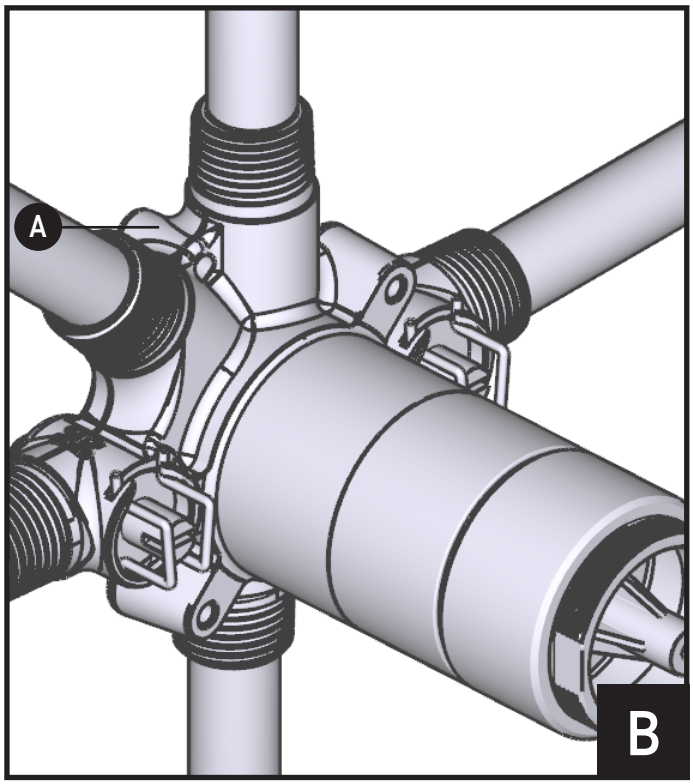

1. Connect pipes to Valve **(A)**. Installation shows soldering.

1. Raccorder les tuyaux à la valve **(A)**. L'illustration montre le résultat d'une installation effectuée au moyen d'un brasage.

1. Conecte la tubería a la válvula **(A)**. La instalación muestra una soldadura.

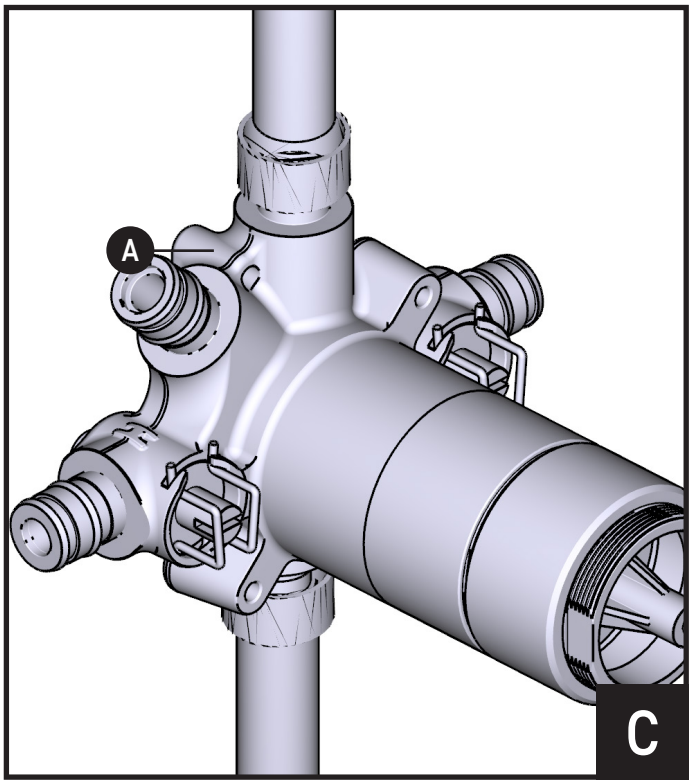

1. Connect pipes to Valve **(A)**. Installation shows PEX.

1. Raccorder les tuyaux à la valve **(A)**. L'illustration montre une installation effectuée au moyen d'un raccord PEX.

1. Conecte la tubería a la válvula **(A)**. La instalación muestra una conexión PEX.

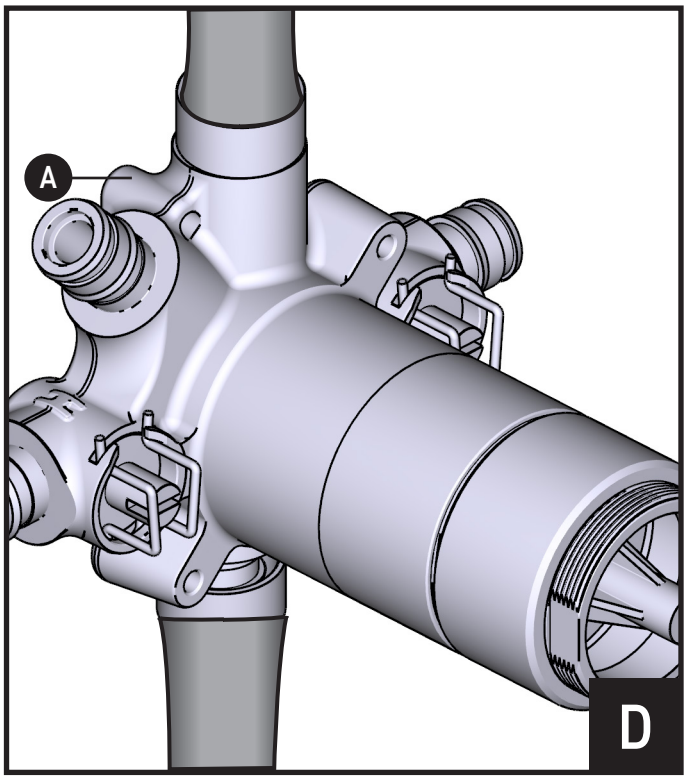

1. Connect pipes to Valve **(A)**. Installation shows CPEX (cold expansion PEX).

1. Raccorder les tuyaux à la valve **(A)**. L'illustration montre une installation effectuée au moyen d'un raccord CPEX (raccord de dilatation à froid PEX).

1. Conecte la tubería a la válvula **(A)**. La instalación muestra una conexión CPEX (con dilatación en frío PEX).

03/18/2021 INS-45-ROUGH 50000454727
Released 00

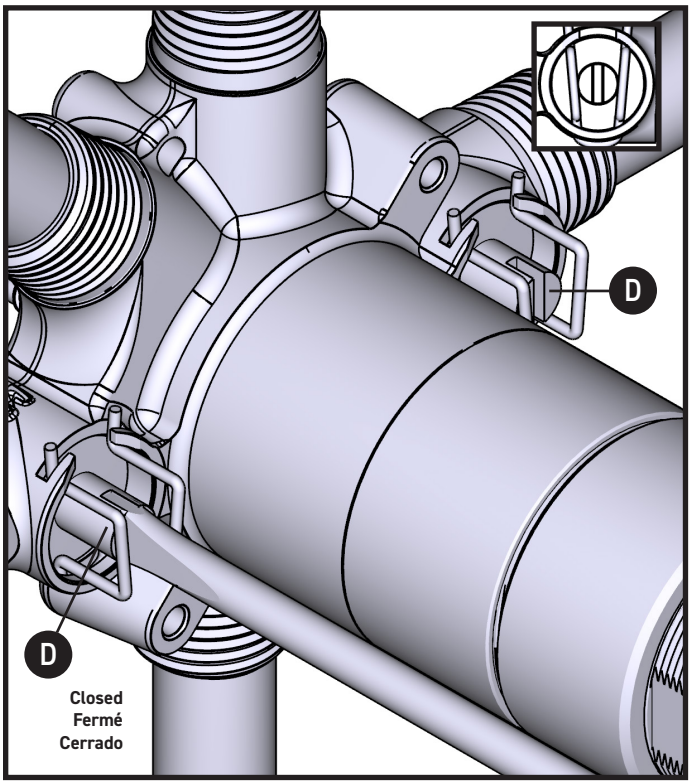

1. Using a flathead screwdriver, rotate the Service Valves **(D)** to the open position. *(Illustration shown is the closed position.)*
1. À l'aide d'un tournevis à tête plate, en faisant pivoter les valves de service **(D)**, les placer à la position « ouverte ». *(Dans l'illustration ci-dessus, les valves sont à la position « fermée ».)*
1. Con un destornillador de punta plana, gire las válvulas de servicio **(D)** a la posición abierta. *(La ilustración que se muestra está en posición cerrada).*

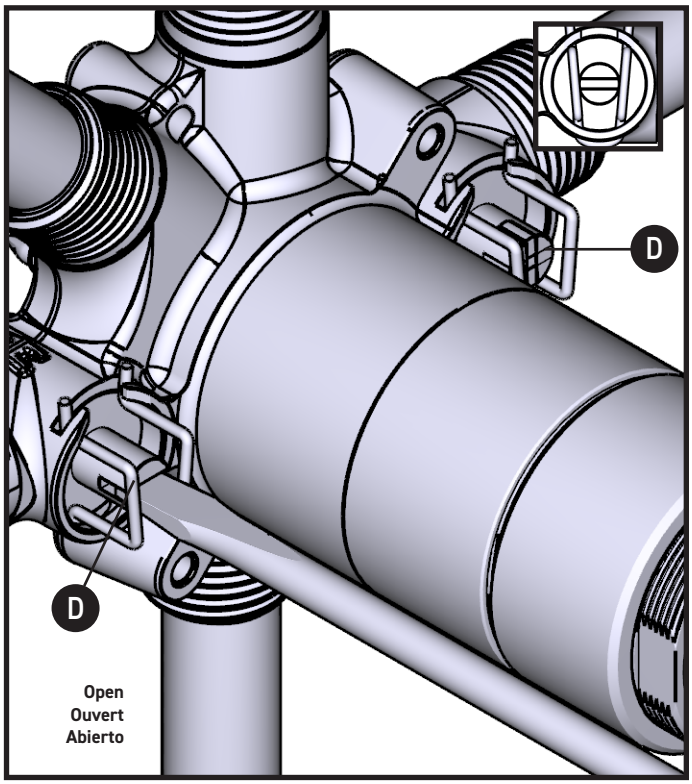

1. Ensure Service Valves **(D)** are now in the open position as illustrated.
1. S'assurer que les valves de service **(D)** se trouvent maintenant dans la position « ouverte », comme illustré ci-dessus.
1. Asegúrese de que las válvulas de servicio **(D)** estén ahora en la posición abierta como se muestra.

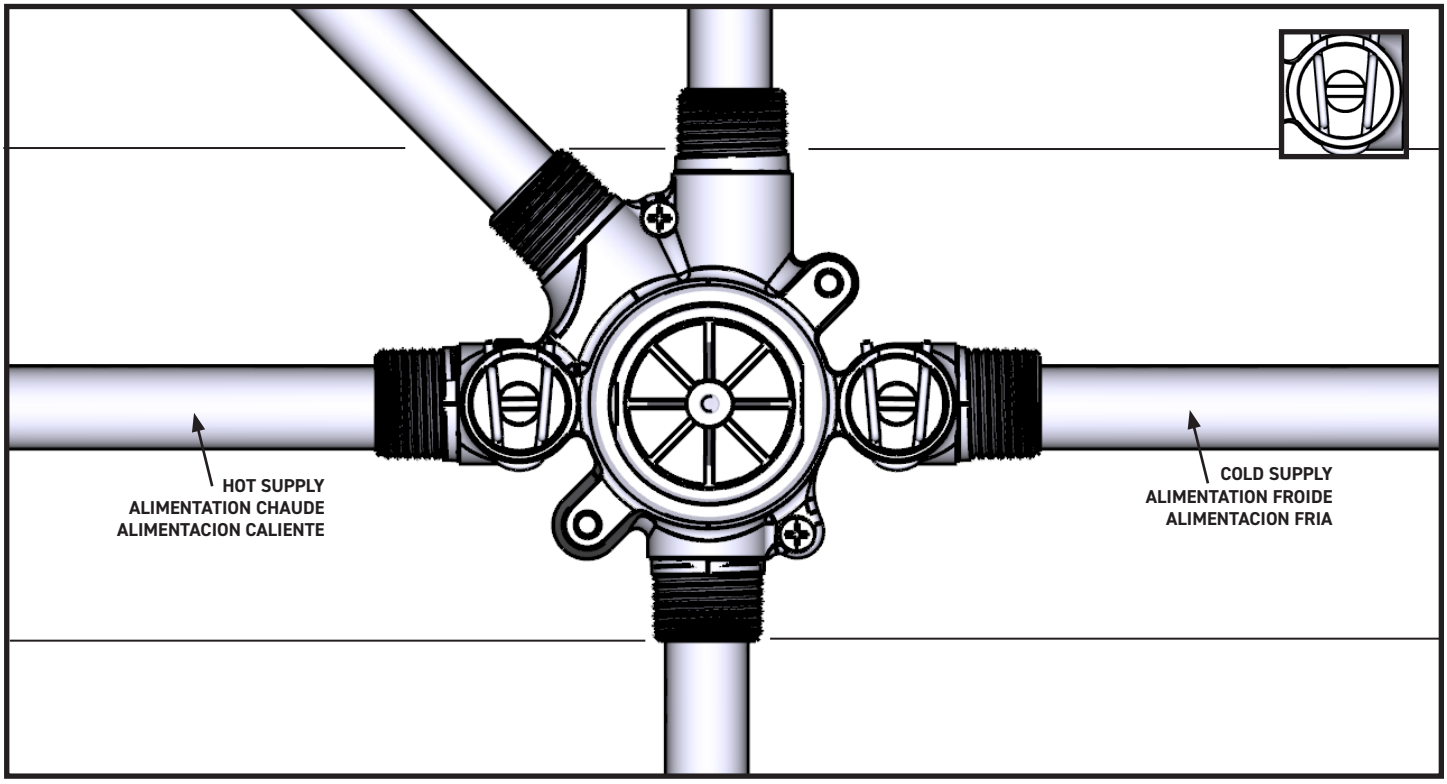

1. Check for leaks. **Cap outlets to keep under pressure.**
1. S'assurer qu'il n'y a aucune fuite. **Bloquer les sorties pour garder sous pression.**
1. Verifique que no haya fugas. **Tape las salidas para mantener baja presion.**

03/18/2021 INS-45-ROUGH 50000454727
Released 00

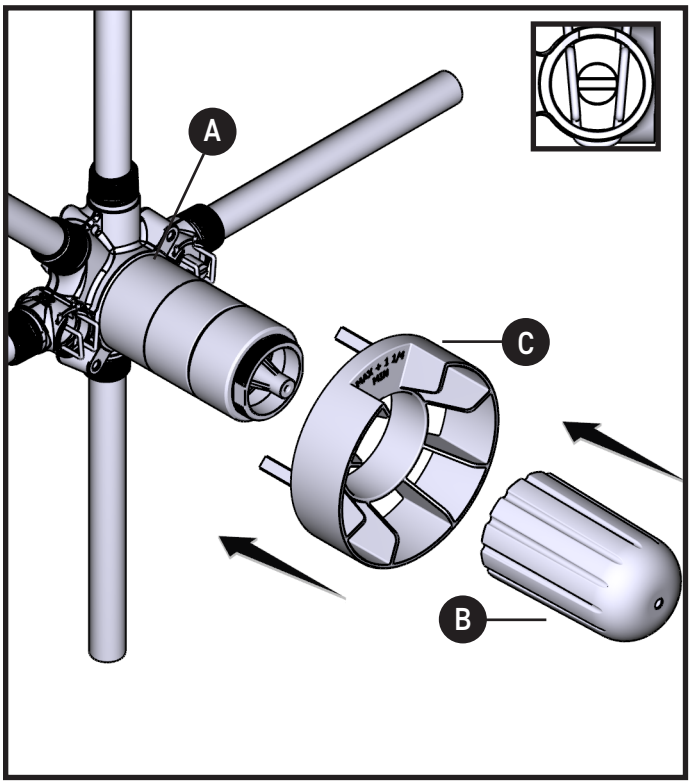

1. Install Plaster Ground **(C)** and Valve Cover **(B)** onto Valve **(A)**.
1. Installer le gabarit d'installation **(C)** et le couvercle de la valve **(B)** sur la valve **(A)**.
1. Instale el protector de válvula **(C)** y la cubierta de la válvula **(B)** en la válvula **(A)**.

Standard Wall
Mur standard
Pared estándar

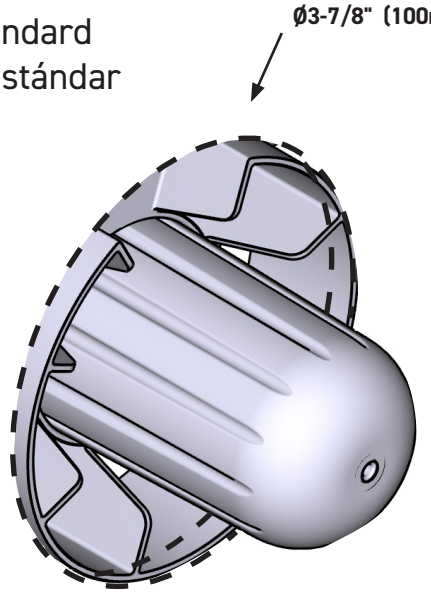

Acrylic Wall
Mur en Acrylique
Pared de Acrílico

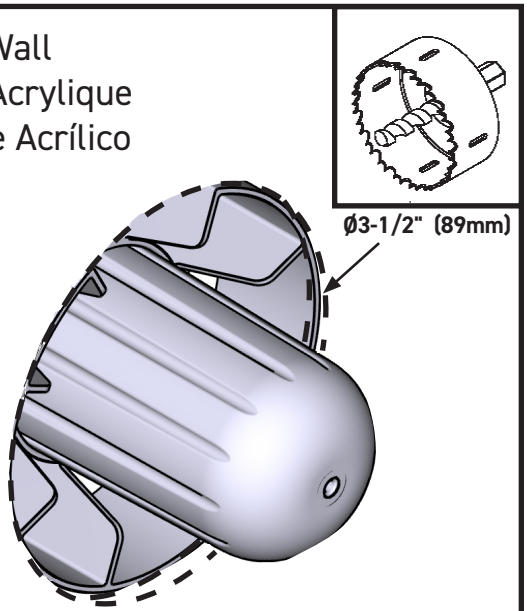

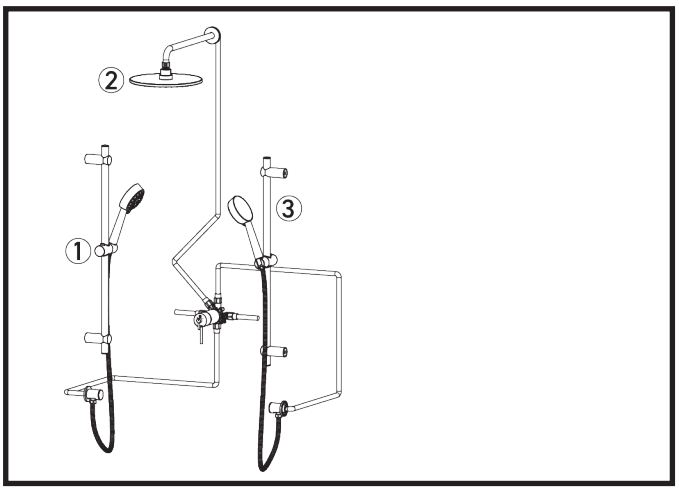

Installation A / Installation A / Instalación A

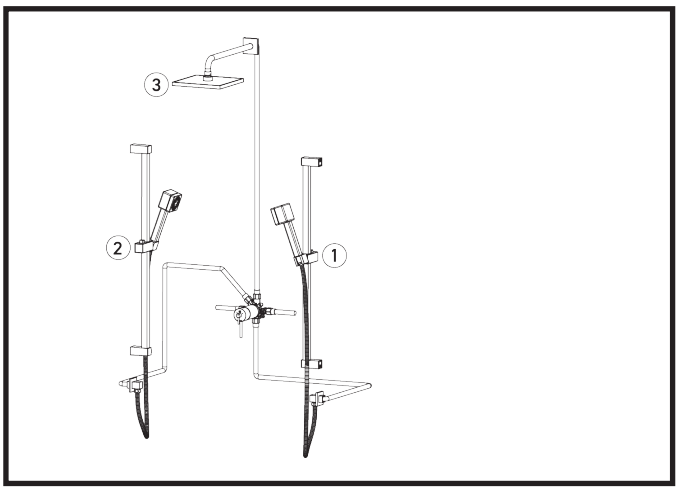

Installation A / Installation A / Instalación A

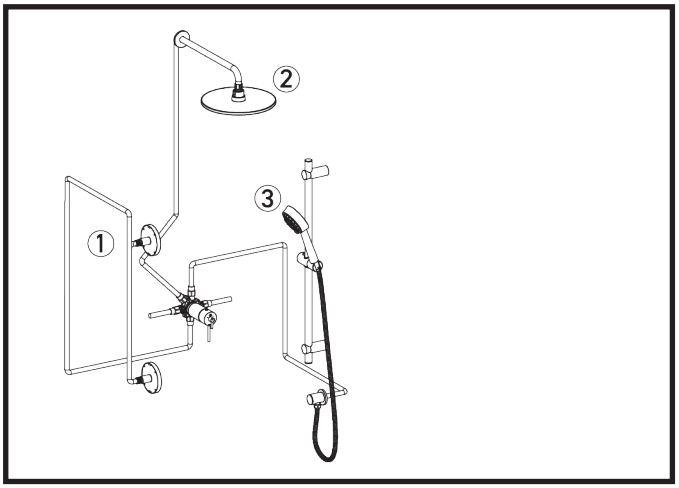

Installation A / Installation A / Instalación A

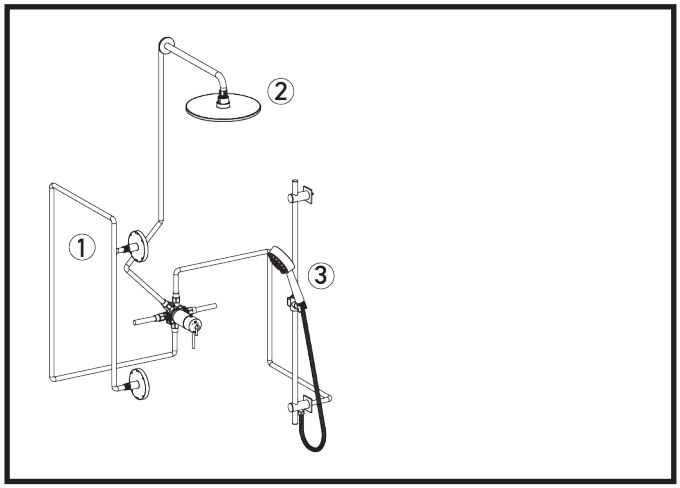

Installation A / Installation A / Instalación A

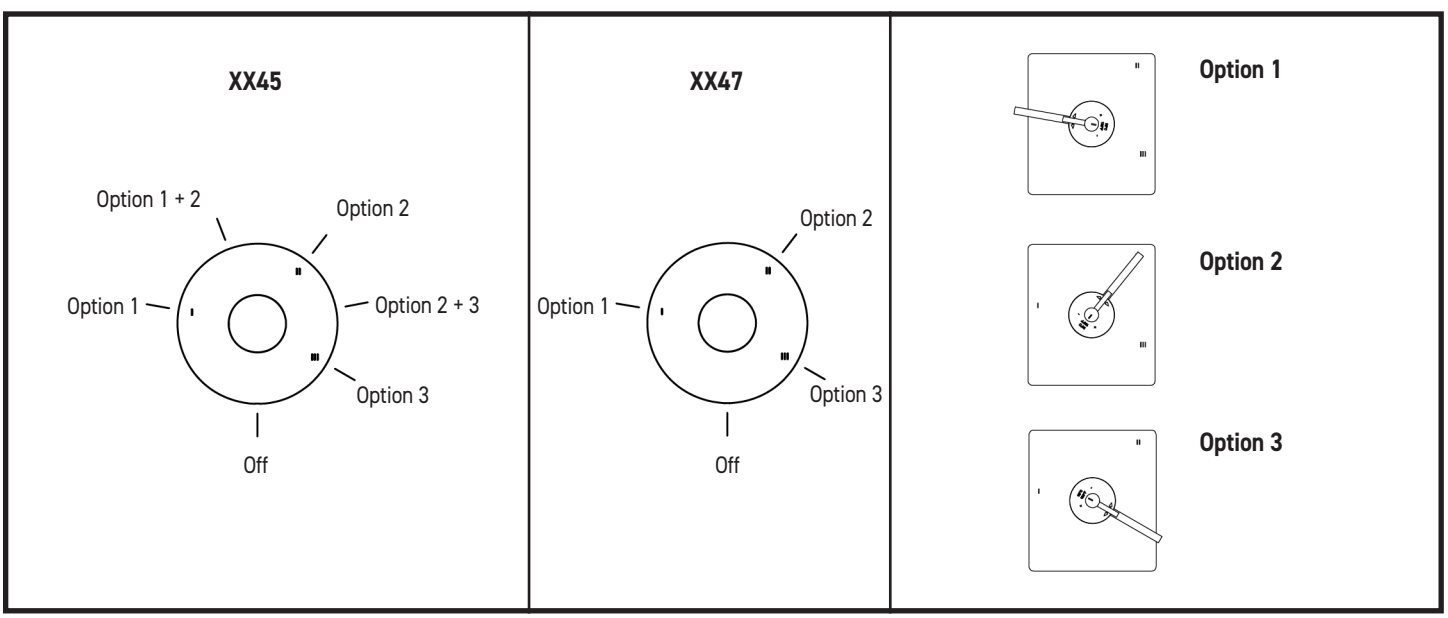

03/18/2021 INS-45-ROUGH 50000045727
Released 00

LIMITED WARRANTY
GARANTIE LIMITÈE
GARANTÍA LIMITADA

Most products or parts carry “Limited Warranties” against manufacturing defects.
For US Customers please visit houseofrohl.com/support and for Canadian customers please visit riobel.ca for complete product and finish warranty.

La plupart des produits ou pièces comprend des «garanties limitées» contre les défauts de fabrication. Pour les clients des États-Unis : veuillez consulter houseofrohl.com/support; Pour les clients du Canada : veuillez consulter riobel.ca pour connaître les conditions complètes de la garantie des produits et finis.

La mayoría de los productos o piezas presentan “Garantías limitadas” contra defectos de fabricación. La mayoría de los productos o piezas cuentan con “Garantías Limitadas” por defectos de fabricación. A los clientes en EE. UU. se les recomienda visitar houseofrohl.com/support y a los clientes en Canadá, riobel.ca, para consultar las condiciones completas de la garantía de los productos y acabados.

FINISH CARE & MAINTENANCE
ENTRETIEN DE VOTRE FINI
CUIDADO Y MANTENIMIENTO DEL ACABADO

The finishing touch on every product is its exquisite surface. Great care has been taken to ensure that the final step in the manufacturing - whether it is a sink, faucet, fitting or an accessory - delivers perfection. Like any quality item, no matter how durable, care should be taken when cleaning and maintaining these finishes. For US Customers please visit houseofrohl.com/support and for Canadian customers please visit riobel.ca for complete finish care and cleaning instructions for your particular finish.

Ce qui distingue nos robinets des autres produits, c’est leur surface d’une beauté exceptionnelle. Un grand soin a été pris pour que la dernière étape de la fabrication - que ce soit pour un évier, un robinet, une composante ou un accessoire - soit fait à la perfection. Comme pour tout article de grande qualité, quelque soit sa durabilité, des précautions doivent être prises lors du nettoyage et de l'entretien des finis. Pour les clients des États-Unis : veuillez consulter houseofrohl.com/support; Pour les clients du Canada : veuillez consulter riobel.ca pour connaître les instructions complètes d'entretien et nettoyage des finis.

El toque final de todo producto es su exquisita superficie. Se ha tenido sumo cuidado para asegurar que el último paso de la fabricación – ya sea de un fregadero, una mezcladora, un herraje o un accesorio – tenga como resultado la perfección. Como con cualquier artículo de calidad, no importa cuán duradero, se debe tener ciertos cuidados al limpiar y mantener estos acabados. A los clientes en EE. UU. se les recomienda visitar houseofrohl.com/support y a los clientes en Canadá, riobel.ca, para ver las instrucciones completas de cuidado y mantenimiento de su acabado particular.

CUSTOMER CARE
SERVICE À LA CLIENTÈLE
ATENCIÓN AL CLIENTE

The House of Rohl® Customer Care Team is committed to efficiently serve and support; and to do so with respect, honesty, and genuineness. We will passionately work together to always exceed our customers' expectations. We strive to delight and surprise our customers, as well as our business partners. To contact one of our Customer Care Team members:

L'équipe du Service à la clientèle de House of Rohl® s'engage à servir et à soutenir nos clients de manière efficace, respectueuse, honnête et authentique. Nous travaillons avec acharnement pour toujours dépasser les attentes de nos clients afin de les ravir et de surprendre, ainsi que celles de nos partenaires d'affaires. Pour contacter le département du Service à la clientèle :

El equipo de Atención al Cliente de House of Rohl® tiene el compromiso de atender y apoyar eficientemente, y de hacerlo con respeto, honestidad y autenticidad. Juntos trabajaremos con entusiasmo para superar siempre las expectativas de nuestros clientes. Nos esforzamos por sorprender agradablemente tanto a nuestros clientes como a nuestros socios comerciales. Para ponerse en contacto con los miembros de nuestro equipo de Atención al Cliente:

01/17/2021 INKS-ROTOGRAVURE 10000054777
Approved

U.S.A.
HOUSEOFROHL.COM
1-800-777-9762

QUEBEC / WEST CANADA / ATLANTIC CANADA
HOUSEOFROHL.CA
1-866-473-8442

ONTARIO
HOUSEOFROHL.CA
1-888-287-5354

Riobel®

150 cm (59") double interlock flexible hose, swivel and 2 check valves

7259

cUPC®

Specifications

Descriptions

- 150 cm (59") double interlock flexible hose, swivel and 2 check valves
- Conical nut ½" female

Available colors

- C : Chrome
- BN : Brushed Nickel (PVD)
- PN : Polished Nickel (PVD)

Certifications

- CSA B125.1
- ASME A112.18.1
- CMR248 Approval

Warranty

This Riobel Inc. product you have purchased carries a Limited Lifetime Warranty on the chrome, PVD finish, blacks and all working parts and is guaranteed from the initial purchase date against all manufacturing defects. All other finishes, including plastic components, are guaranteed for one year. All electric and/or electronic parts are covered by a 5-year limited warranty. The warranty offered on our products will be honored only if the installation is performed by a certified master plumber.

Customer Care

Phone (800) 777 - 9762 | Email: customercare@houseofrohl.com | Website: houseofrohl.com/support/contact-us

Rail de douche sans douchette

4862

Spécifications

Descriptions

- Curseur Easy-Glide à gauche
- Barre Ø19 mm (¾")

Couleurs disponible

- C : Chrome
- BN : Nickel brossé (PVS)
- PN : Nickel poli (PVS)

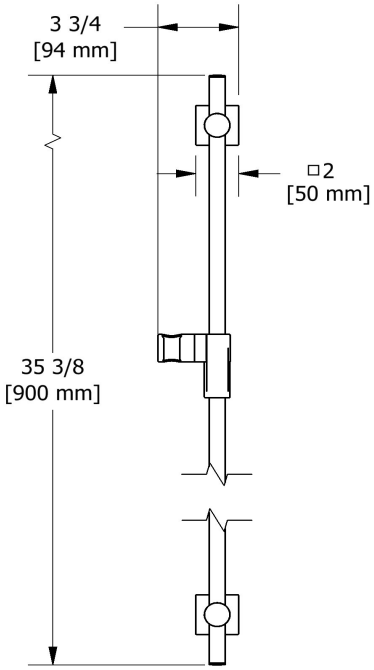

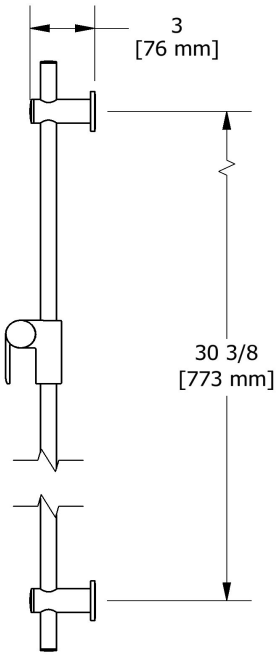

Les dimensions, les modèles et les finis présentés peuvent différer.

Garantie

Le produit **Riobel Inc.** que vous venez d'acquérir est couvert par une garantie À VIE limitée contre tout vice de fabrication sur les pièces et les finis chrome, PVS et noirs et toutes les pièces actives à partir de la date d'achat. Les autres finis, notamment les plastiques, sont garantis un an. Tous les composants électriques et électroniques sont couverts par une garantie limitée de 5 ans.

Service à la clientèle

Ontario, Ouest Canadien : 888-287-5354 Québec, Maritimes, États-Unis : 866-473-8442

2020.11.06

Shower rail without hand shower

4862

Specifications

Descriptions

- Easy-Glide left cursor
- Ø19 mm (¾") slide bar

Available colors

- C : Chrome
- BN : Brushed Nickel (PVD)
- PN : Polished Nickel (PVD)

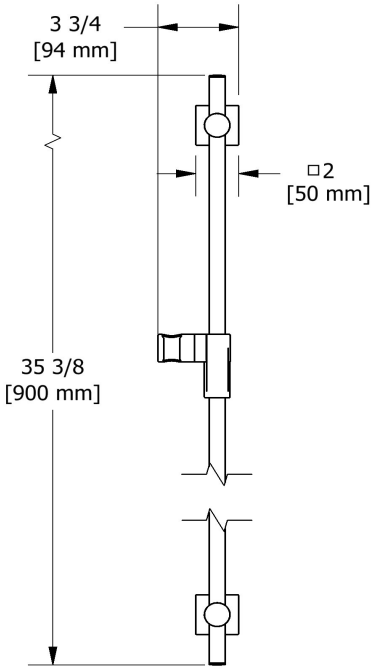

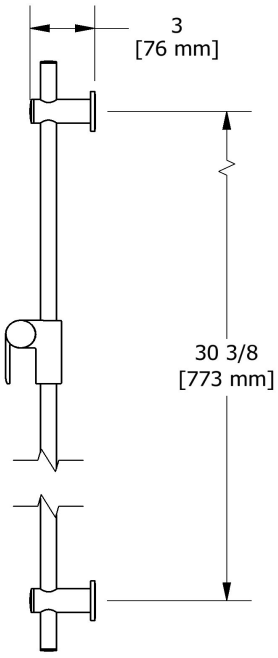

Sizes, models and finishes may differ from thoses presented.

Warranty

This **Riobel Inc.** product you have purchased carries a Limited Lifetime Warranty on the chrome, PVD finish, blacks and all working parts and is guaranteed from the initial purchase date against all manufacturing defects. All other finishes, including plastic components, are guaranteed for one year. All electric and/or electronic parts are covered by a 5-year limited warranty.

Customer Service

Ontario, West Canada : 888-287-5354 Quebec, Maritimes, United States : 866-473-8442

2020.11.06

Riobel®

20 cm (8") shower head

488

Specifications

Descriptions

- Scale-free
- Swivel
- G½" inlet female

Available colors

- C : Chrome
- BN : Brushed Nickel (PVD)

Available flows

- 7.6 L/min, 2.0 gpm (US) 60psi
- 5.69 L/min, 1.5 gpm (US) 60psi (**488-15**)
- 6.6L/min, 1.75 gpm (US) 60psi (**488-WS**) ***

EPA certification applicable to the indicated model only

Certifications

- CSA B125.1
- ASME A112.18.1
- CMR248 Approval

* WaterSense Meets EPA Criteria Certified by IAPMO R&T

cUPC®

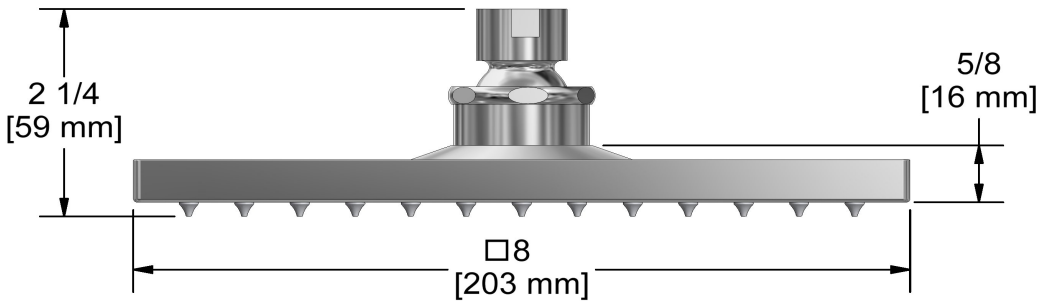

Sizes, models and finishes may differ from thoses presented.

Warranty

This Riobel Inc. product you have purchased carries a Limited Lifetime Warranty on the chrome, PVD finish, blacks and all working parts and is guaranteed from the initial purchase date against all manufacturing defects. All other finishes, including plastic components, are guaranteed for one year. All electric and/or electronic parts are covered by a 5-year limited warranty. The warranty offered on our products will be honored only if the installation is performed by a certified master plumber.

Customer Care

Phone (800) 777 - 9762 | Email: customercare@houseofrohl.com | Website: houseofrohl.com/support/contact-us

Specifications

3-jet hand shower

4372

Descriptions

- 5 positions
- 3 jets: luxurious, invigorating, massage and mix
- Scale-free
- 4372, 3-jet hand shower

Available flows

- 7.6 L/min, 2.0 gpm (US) 60psi
- 5.7 L/min, 1.5 gpm (US) 60psi (**4372-15**) ***
- 6.7 L/min, 1.8 gpm (US) 60psi (**4372-WS**) ***

EPA certification applicable to the indicated model only

Certifications

- CSA B125.1
- ASME A112.18.1

* WaterSense Meets EPA Criteria Certified by IAPMO R&T

cUPC®

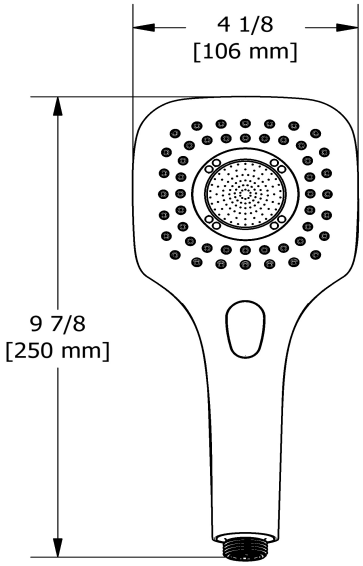

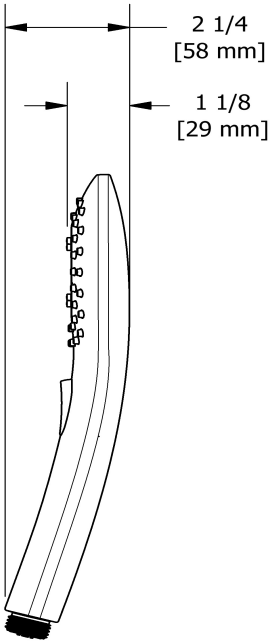

Sizes, models and finishes may differ from thoses presented.

Warranty

This Riobel Inc. product you have purchased carries a Limited Lifetime Warranty on the chrome, PVD finish, blacks and all working parts and is guaranteed from the initial purchase date against all manufacturing defects. All other finishes, including plastic components, are guaranteed for one year. All electric and/or electronic parts are covered by a 5-year limited warranty. The warranty offered on our products will be honored only if the installation is performed by a certified master plumber.

Customer Care

Phone (800) 777 - 9762 | Email: customercare@houseofrohl.com | Website: houseofrohl.com/support/contact-us

Specifications

Descriptions

- Adjustable depth
- ½" outlet male
- ½" inlet female NPT

Available colors

- C : Chrome
- PN : Polished Nickel (PVD)
- BK : Black

Elbow supply

772

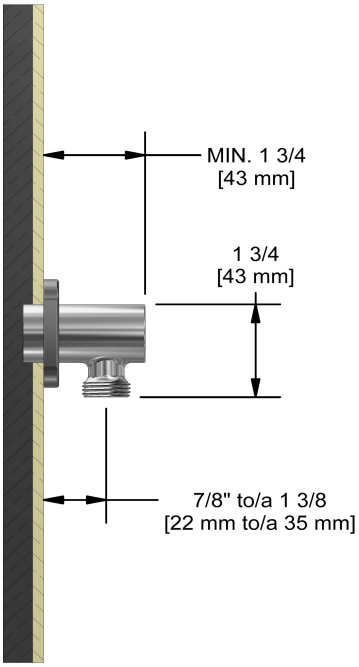

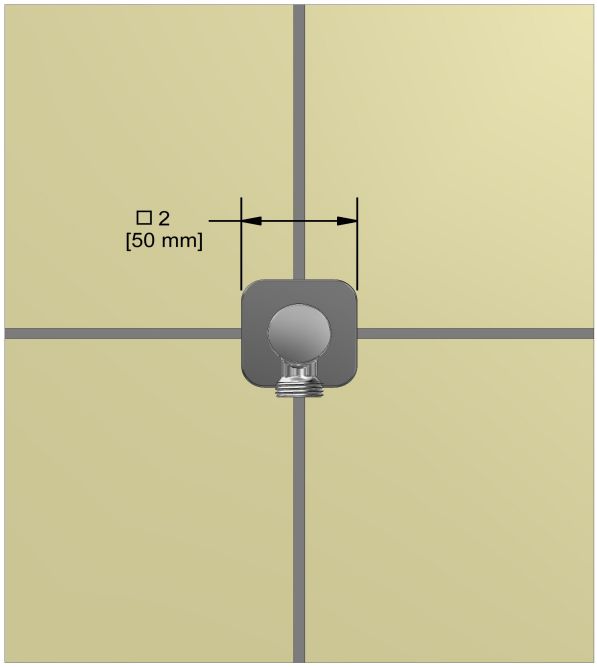

Sizes, models and finishes may differ from thoses presented.

Warranty

This Riobel Inc. product you have purchased carries a Limited Lifetime Warranty on the chrome, PVD finish, blacks and all working parts and is guaranteed from the initial purchase date against all manufacturing defects. All other finishes, including plastic components, are guaranteed for one year. All electric and/or electronic parts are covered by a 5-year limited warranty. The warranty offered on our products will be honored only if the installation is performed by a certified master plumber.

Customer Care

Phone (800) 777 - 9762 | Email: customercare@houseofrohl.com | Website: houseofrohl.com/support/contact-us

Consult your local House of Rohl showroom for additional information and specifications. For complete warranty details and a list of showrooms, go to houseofrohl.com

Specifications

Descriptions

- ½" inlet male NPT
- Shower arm with Venty flange with set screw

Available colors

- C : Chrome

40 cm (16") shower arm

594

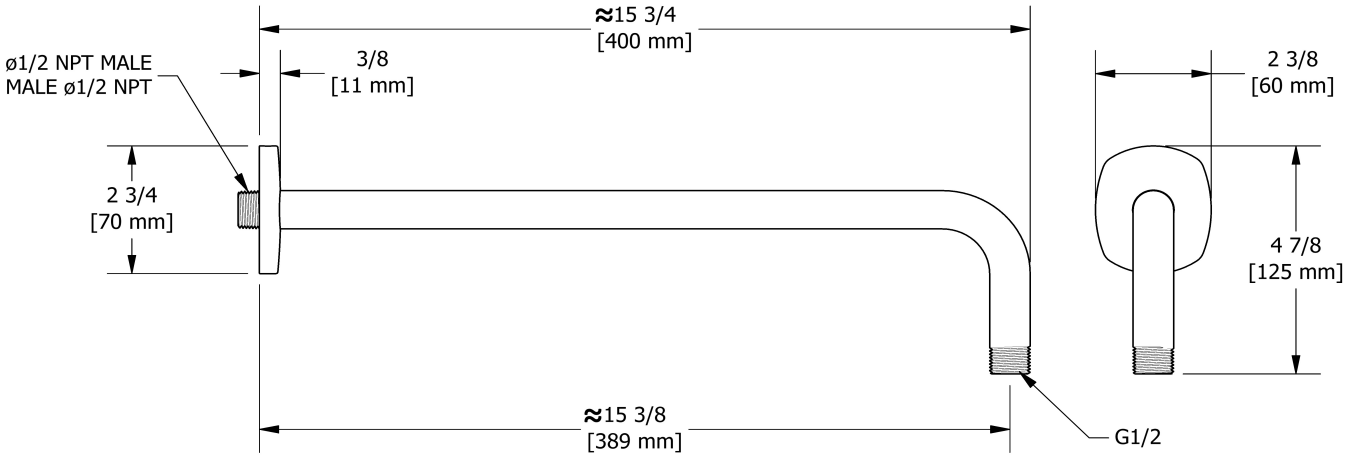

Sizes, models and finishes may differ from thoses presented.

Warranty

This Riobel Inc. product you have purchased carries a Limited Lifetime Warranty on the chrome, PVD finish, blacks and all working parts and is guaranteed from the initial purchase date against all manufacturing defects. All other finishes, including plastic components, are guaranteed for one year. All electric and/or electronic parts are covered by a 5-year limited warranty. The warranty offered on our products will be honored only if the installation is performed by a certified master plumber.

Customer Care

Phone (800) 777 - 9762 | Email: customercare@houseofrohl.com | Website: houseofrohl.com/support/contact-us

Consult your local House of Rohl showroom for additional information and specifications. For complete warranty details and a list of showrooms, go to houseofrohl.com

Riobel®

3-way Type T/P coaxial valve trim

TVY45

cUPC® ADA

Specifications

Descriptions

- Trim only
- Thermostatic/pressure balance coaxial cartridge with check valves
- R45, R45-SPEX or R45-EX rough required to complete
- 6 positions (OFF, 1, 1 and 2, 2, 2 and 3, 3) share

Available colors

- C : Chrome

Certifications

- CSA B125.1
- ASME A112.18.1
- ASSE 1016
- CMR248 Approval
- ADA

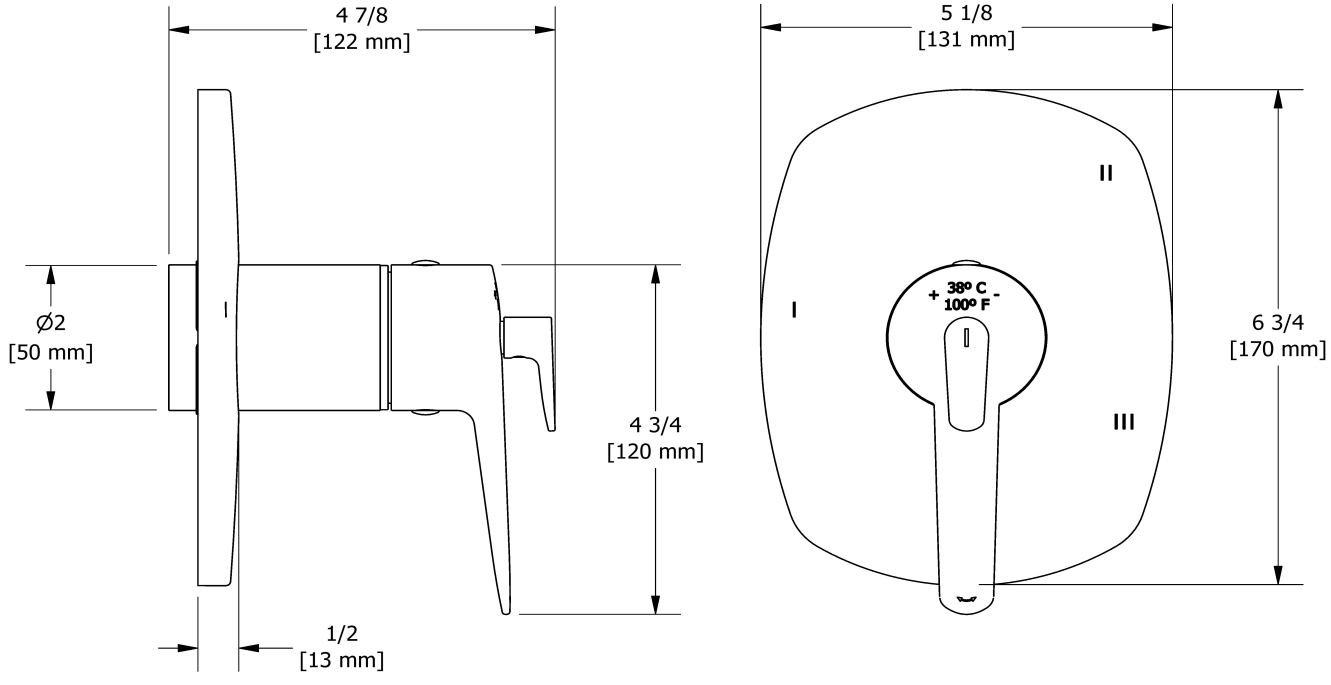

Sizes, models and finishes may differ from thoses presented.

Warranty

This Riobel Inc. product you have purchased carries a Limited Lifetime Warranty on the chrome, PVD finish, blacks and all working parts and is guaranteed from the initial purchase date against all manufacturing defects. All other finishes, including plastic components, are guaranteed for one year. All electric and/or electronic parts are covered by a 5-year limited warranty. The warranty offered on our products will be honored only if the installation is performed by a certified master plumber.

Customer Care

Phone (800) 777 - 9762 | Email: customercare@houseofrohl.com | Website: houseofrohl.com/support/contact-us

Riobel®

Specifications

Wall-mount tub spout

VY80

Descriptions

- ½" inlet male NPT
- Brass

Available colors

- C : Chrome

Certifications

- CSA B125.1
- ASME A112.18.1
- CMR248 Approval

cUPC®

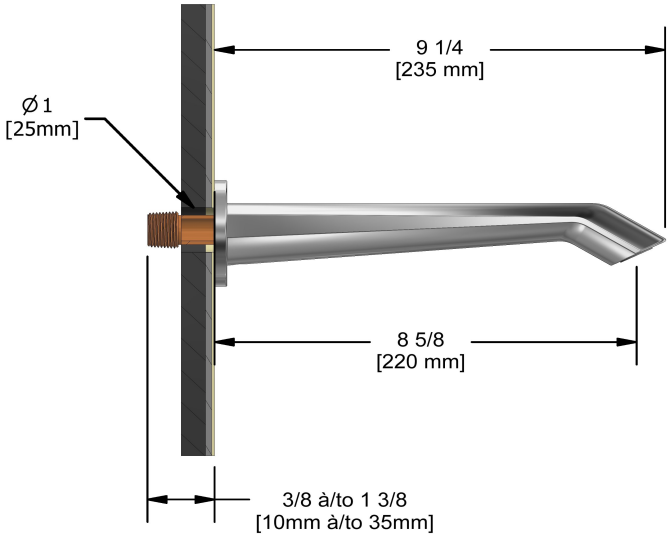

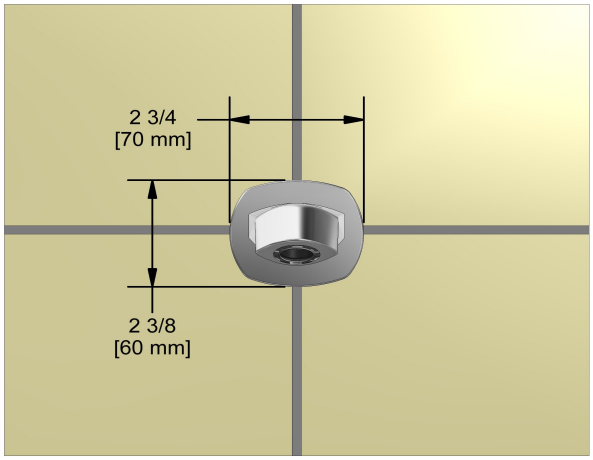

Sizes, models and finishes may differ from thoses presented.

Warranty

This Riobel Inc. product you have purchased carries a Limited Lifetime Warranty on the chrome, PVD finish, blacks and all working parts and is guaranteed from the initial purchase date against all manufacturing defects. All other finishes, including plastic components, are guaranteed for one year. All electric and/or electronic parts are covered by a 5-year limited warranty. The warranty offered on our products will be honored only if the installation is performed by a certified master plumber.

Customer Care

Phone (800) 777 - 9762 | Email: customercare@houseofrohl.com | Website: houseofrohl.com/support/contact-us