Specifications

KALADA
PFXCM2M212 7266436
Two Handle Kitchen Faucet

Product Features

- Ceramic cartridge
- Metal lever handle
- Max. flow rate: 1.75 gpm (6.6 L/min) at 60 psi
- cUPC/IAPMO listed
- NSF-61 compliant
- ADA compliant

PFXCM2M212

Optional Accessories / Available Parts

PFXCM2M212 Chrome

Product Specifications

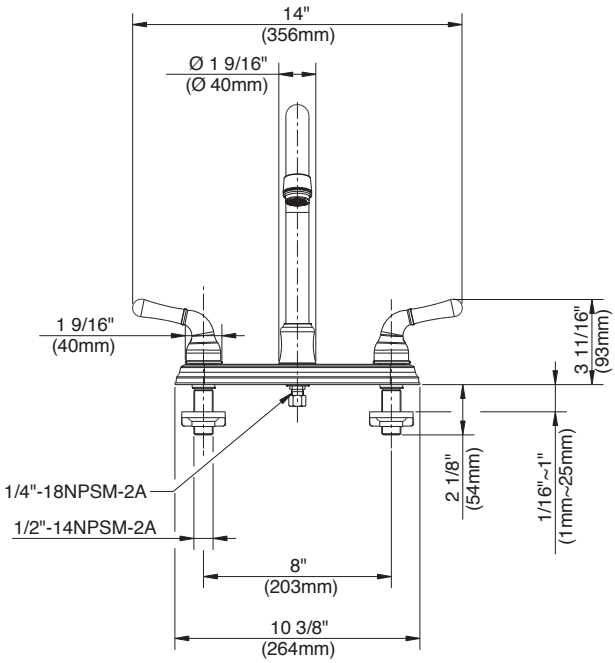

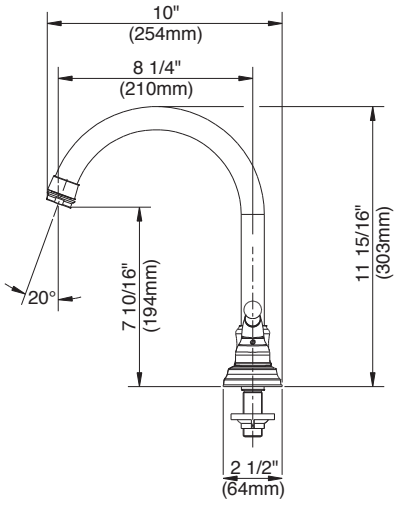

* All measurements are nominal. Please verify before actual installation.

Warranty and Codes

This product comes complete with installation, operating, care and maintenance instructions.
This PROFLO faucet carries a limited lifetime warranty when installed in residential applications.
The warranty is five years in commercial applications.
Compliant with lead content requirements of California AB 1953 and Vermont S.152.

©2021 Ferguson Enterprises, LLC 10/21