PFISTER

One Handle Kitchen Faucet

FWK1-100C Finish(C) ❑

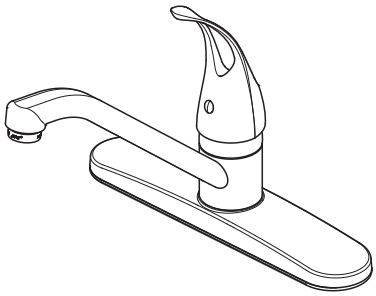

Specifications

Features

- 2.2 GPM at 60 PSI
- 3 Hole Installation
- Swivel Spout
- Pforever Warranty®
- Swivel Spout

Code Compliance

Pfister products are designed and manufactured in compliance with the following standards and codes:

- IAPMO Certified
- CSA B125 Certified
- ASME A112.18.1
- NSF 61/9 Annex G (Low lead)
- ADA Compliant-ANSI A117.1 (Lever handles only)

Dimensions

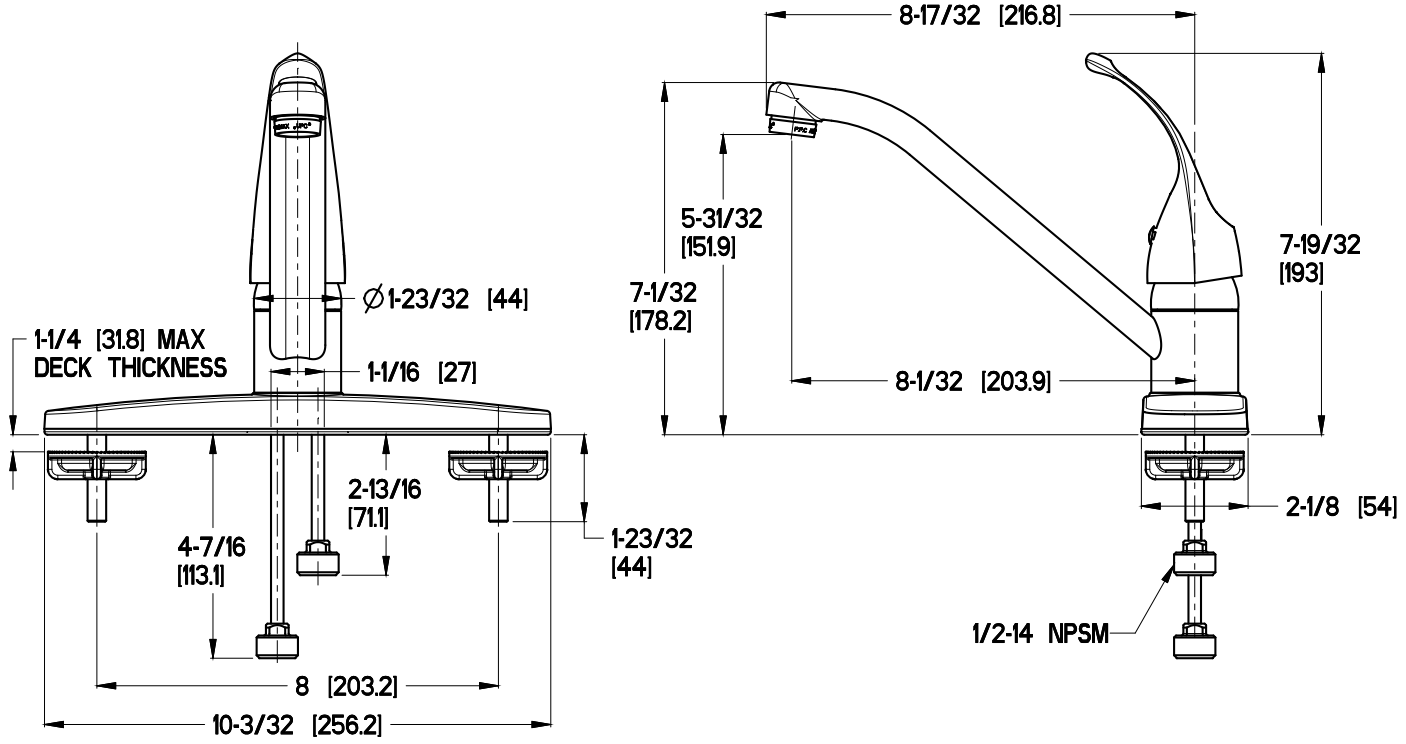

Ø1-3/8 Min to Ø1-1/2 Max. Deck Hole Openings

Copyright © 2014, Pfister Inc.