NOTES:

1. APPLY ADHESIVE LOCTITE 680 OR EQUIVALENT.

BILL OF MATERIAL (CURRENT LEVEL)

ITEM	PT/ASSY	DESCRIPTION	TYPE	QTY.
1	50914	TUBE STEM	PART	1
2	50913	END NUT	PART	1
3	50489	HANDLE	PART	1
4	50487	HANDLE STOP	PART	1
5	92004	SET SCREW 10-32 X 3/16	PART	2
6	50697	HANDSHOWER BODY	PART	1
7	50488	FACEPLATE	PART	1
8	91159	O-RING, (PARKER #2-029)	PART	1
9	5-050	CHECK VALVE, NEOPERL DW10, WHITE	PART	2
10	11913	FLOW REGULATOR, 2.0 GPM MAX	PART	1

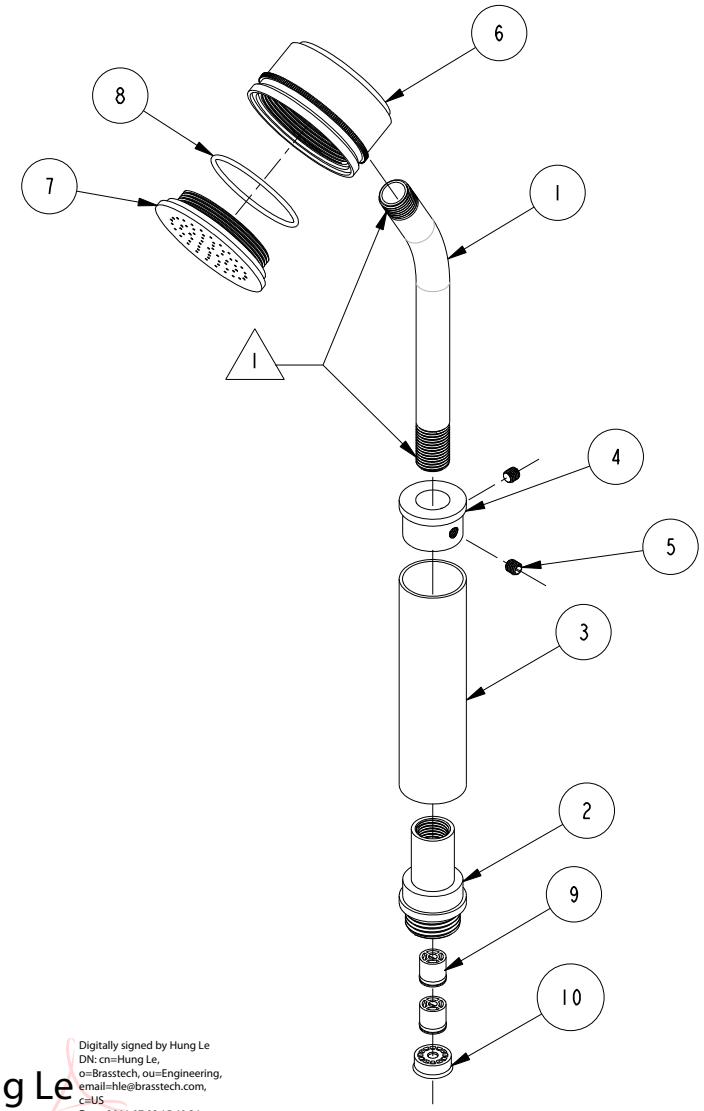

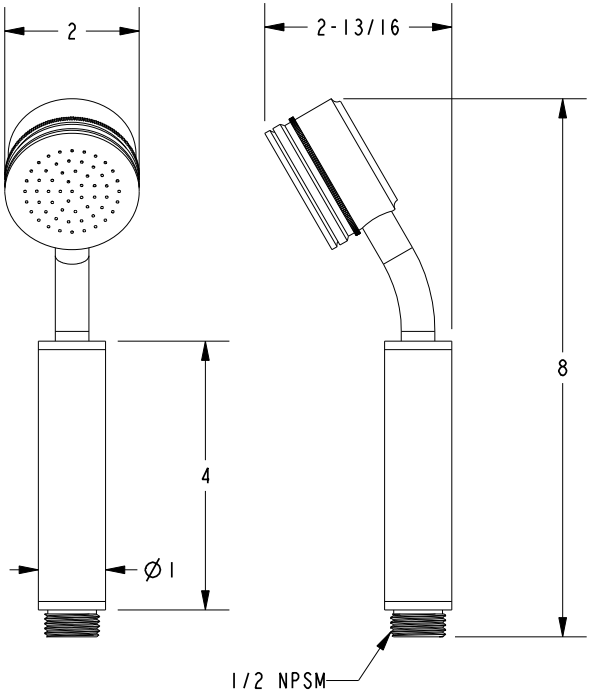

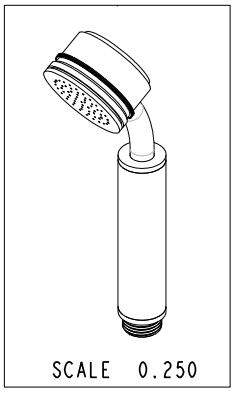

Hung Le

Digitally signed by Hung Le
DN: cn=Hung Le, o=Brasstech, ou=Engineering, email=hle@brasstech.com, c=US
Date: 2011.07.08 15:40:34 -07'00'

COPYRIGHT 2005 BRASSTECH, INC. THESE DRAWINGS AND THE DESIGNS DEPICTED HEREIN ARE THE PROPRIETARY PROPERTY OF BRASSTECH. ANY USE OR REPRODUCTION IS SUBJECT TO THE EXPRESS APPROVAL OF BRASSTECH. UNAUTHORIZED USE IS STRICTLY PROHIBITED. ALL RIGHTS RESERVED.

BRASSTECH INCORPORATED
2001 E. CARNEGIE AVE.
SANTA ANA, CA 92705
(949) 417-5207

HAND SHOWER

ASSY. NO. 283-2

SCALE 0.350 | REF. - | SHEET 1 OF 1

REV	REV DESC	DATE
A	EN-1668	07/07/11
-	EO-0357	05/20/04