INSTALLER: LEAVE THIS MANUAL WITH THE APPLIANCE.
CONSUMER: RETAIN THIS MANUAL FOR FUTURE REFERENCE.

NAPOLEON®
QUALITY FIREPLACES
Award Winning Products

INSTALLATION AND OPERATING INSTRUCTIONS

CERTIFIED UNDER AMERICAN NATIONAL STANDARDS, ANSI Z21.11.2B, VOLUME II FOR UNVENTED ROOM HEATERS.

GVF40P
PROPANE

GVF40N
NATURAL GAS

UNVENTED MILLIVOLT SYSTEM

CERTIFIED FOR THE UNITED STATES USING ANSI METHODS.

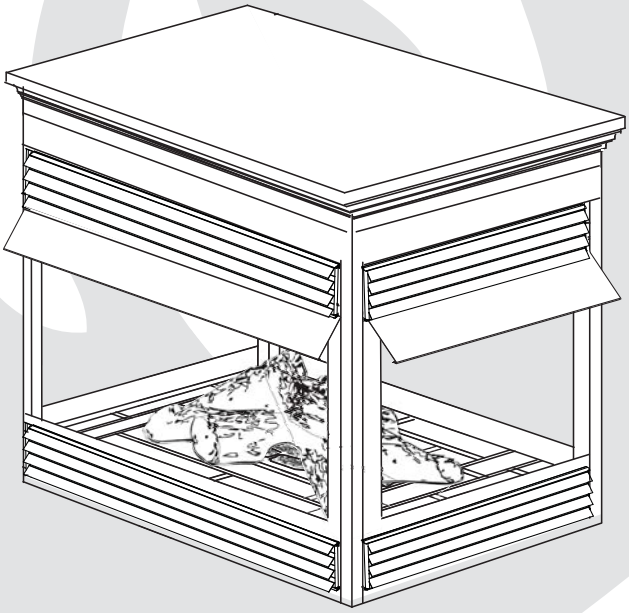

SAFETY INFORMATION

⚠ WARNING

If the information in these instructions are not followed exactly, a fire or explosion may result causing property damage, personal injury or loss of life.

- Do not store or use gasoline or other flammable vapors and liquids in the vicinity of this or any other appliance.

- WHAT TO DO IF YOU SMELL GAS:

- **Do not try to light any appliance.**
- **Do not touch any electrical switch; do not use any phone in your building.**
- **Immediately call your gas supplier from a neighbour's phone. Follow the gas supplier's instructions.**
- **If you cannot reach your gas supplier, call the fire department.**

- Installation and service must be performed by a qualified installer, service agency or the supplier.

- This is an unvented gas-fired heater that uses air (oxygen) from the room in which it is installed. Provisions for adequate combustion and ventilation air must be provided.

HPBA Hearth, Patio & Barbecue Association

GO GREEN ECO-FRIENDLY TECHNOLOGY

Quality System Certified To ISO 9001-2008

Intertek

APPLY SERIAL NUMBER LABEL FROM CARTON

Serial No. XXXXXX000000
MODEL NO.

Wolf Steel Ltd., 24 Napoleon Rd., Barrie, ON, L4M 4Y8 Canada /
103 Miller Drive, Crittenden, Kentucky, USA, 41030
Phone (705)721-1212 • Fax (705)722-6031 • www.napoleonfireplaces.com • ask@napoleonproducts.com

TABLE OF CONTENTS

<u>NOTE:</u> Changes, other than editorial, are denoted by a vertical line in the margin

1.0 INSTALLATION OVERVIEW

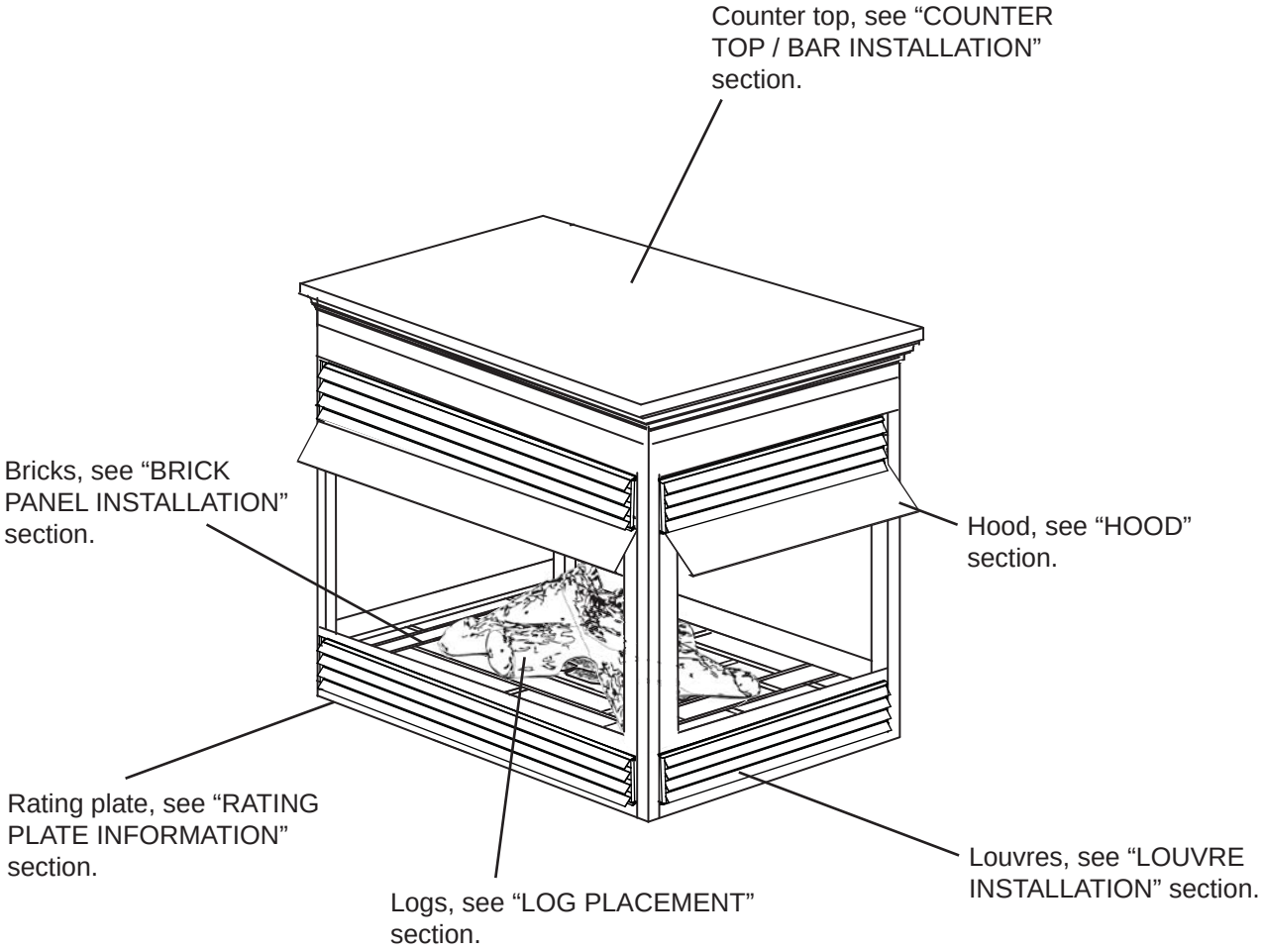

2.0 INTRODUCTION

⚠ WARNING

- **THIS APPLIANCE IS HOT WHEN OPERATED AND CAN CAUSE SEVERE BURNS IF CONTACTED.**
- **ANY CHANGES TO THIS APPLIANCE OR ITS CONTROLS CAN BE DANGEROUS AND IS PROHIBITED.**
- Under no circumstances should this appliance be modified.
- Do not operate appliance before reading and understanding operating instructions. Failure to operate appliance according to operating instructions could cause fire or injury.
- Risk of burns. The appliance should be turned off and cooled before servicing.
- Do not install damaged, incomplete or substitute components.
- Risk of cuts and abrasions. Wear protective gloves and safety glasses during installation. Sheet metal edges may be sharp.
- Provide adequate ventilation and combustion air. Provide adequate accessibility clearance for servicing and operating the appliance. Never obstruct the front opening of the appliance.
- If the appliance shuts off, do not re-light until you provide fresh air. If appliance keeps shutting off, have it serviced. Keep burner and control compartment clean.
- Do not burn wood or other materials in this appliance.
- Young children should be carefully supervised when they are in the same room as the appliance. Toddlers, young children and others may be susceptible to accidental contact burns. A physical barrier is recommended if there are at risk individuals in the house. To restrict access to an appliance, install an adjustable safety gate to keep toddlers, young children and other at risk individuals out of the room and away from hot surfaces.
- Due to high temperatures, the appliance should be located out of traffic and away from furniture and draperies.
- Ensure you have incorporated adequate safety measures to protect infants/toddlers from touching hot surfaces.
- Clothing or other flammable material should not be placed on or near the appliance.
- Check with your local hearth specialty dealer for safety screens and hearth guards to protect children from hot surfaces. These screens and guards must be fastened to the floor.
- Any safety screen or guard removed for servicing must be replaced prior to operating the appliance.
- It is imperative that the control compartments, burners and circulating blower and its passageway in the appliance are kept clean. The appliance should be inspected before use and at least annually by a qualified service person. More frequent cleaning may be required due to excessive lint from carpeting, bedding material, etc. The appliance area must be kept clear and free from combustible materials, gasoline and other flammable vapours and liquids.
- Furniture or other objects must be kept a minimum of 4 feet away from the front of the appliance.
- Do not use this appliance if any part has been under water. Immediately call a qualified service technician to inspect the appliance and to replace any part of the control system and any gas control which has been under water.
- Do not allow fans to blow directly into the appliance. Avoid any drafts that alter burner flame patterns.
- Do not use a blower insert, heat exchanger insert or other accessory not approved for use with this appliance.
- Carbon or soot should not occur in a vent free appliance as it can distribute into the living area of your home. If you notice any signs of carbon or soot, immediately turn off your appliance and arrange to have it serviced by a qualified technician before operating it again.
- Keep the packaging material out of reach of children and dispose of the material in a safe manner. As with all plastic bags, these are not toys and should be kept away from children and infants.
- As with any combustion appliance, we recommend having your appliance regularly inspected and serviced as well as having a Carbon Monoxide Detector installed in the same area to defend you and your family against Carbon Monoxide.
- The appliance screen must be in place when the appliance is operating.

3.4

2.1 DIMENSIONS

4-SIDED

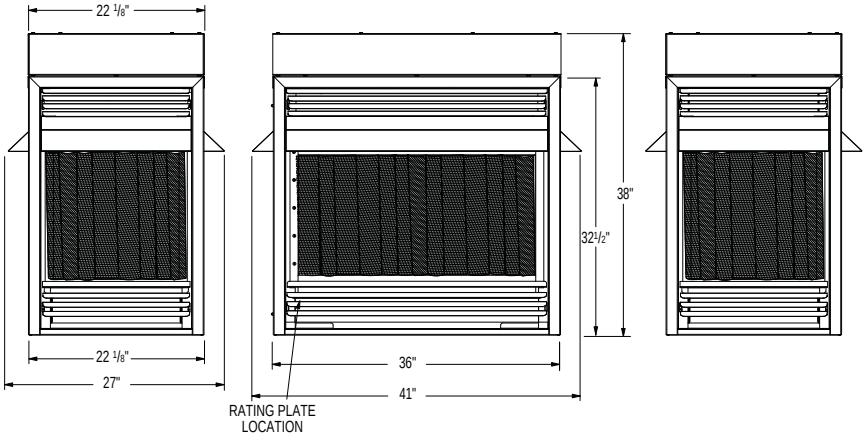

SEE-THRU

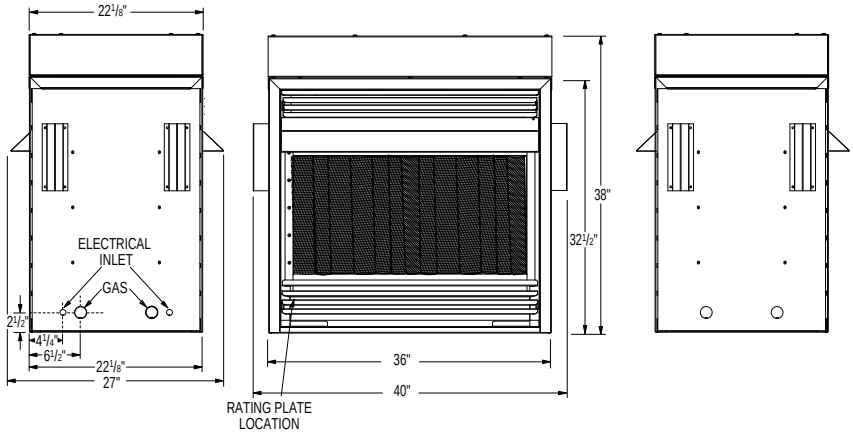

OPEN-END

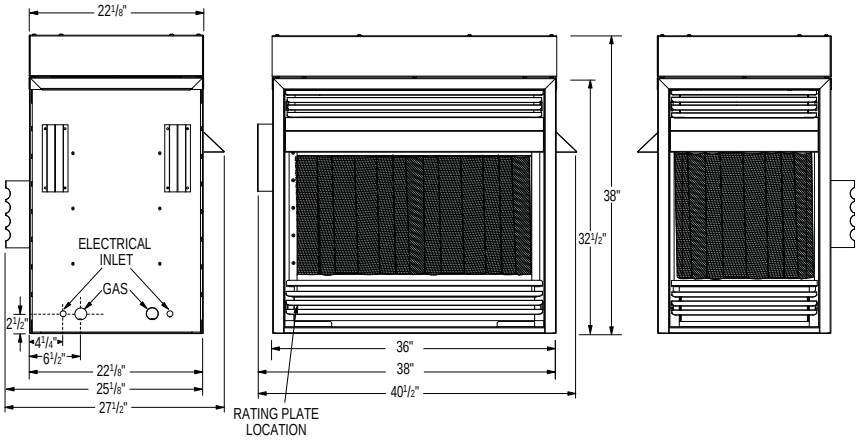

PENINSULA

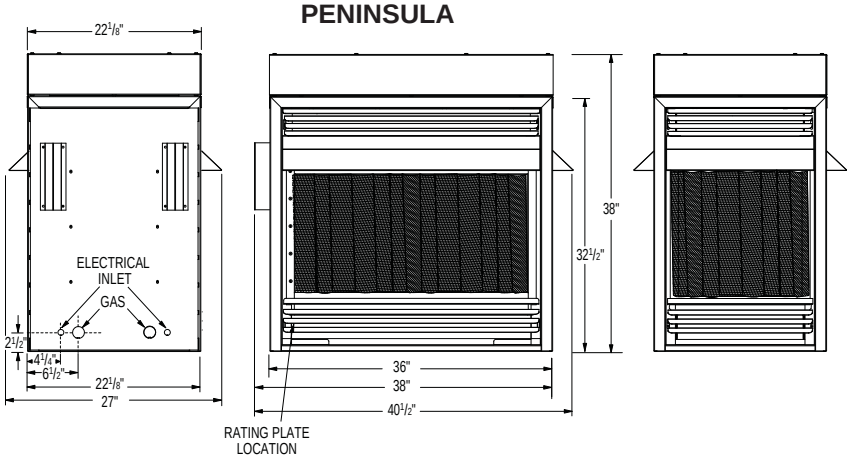

2.2 GENERAL INSTRUCTIONS

⚠ WARNING

CARBON MONOXIDE POISONING MAY LEAD TO DEATH
EARLY SIGNS OF CARBON MONOXIDE POISONING RESEMBLE THE FLU, WITH HEADACHE, DIZZINESS AND/OR NAUSEA. IF YOU HAVE THESE SIGNS, THE HEATER MAY NOT BE WORKING PROPERLY. GET FRESH AIR AT ONCE! HAVE HEATER SERVICED.
SOME PEOPLE---PREGNANT WOMEN, PERSONS WITH HEART OR LUNG DISEASE, ANEMIA, THOSE UNDER THE INFLUENCE OF ALCOHOL, THOSE AT HIGH ALTITUDES--- ARE MORE AFFECTED BY CARBON MONOXIDE THAN OTHERS.

THE APPLIANCE IS ONLY FOR USE WITH THE TYPE OF GAS INDICATED ON THE RATING PLATE. THIS APPLIANCE IS NOT CONVERTIBLE FOR USE WITH OTHER GASES.

OBJECTS PLACED IN FRONT OF THE HEATER SHOULD BE KEPT A MINIMUM OF 48” AWAY FROM THE FRONT FACE OF THE APPLIANCE.

USE ONLY WOLF STEEL APPROVED OPTIONAL ACCESSORIES AND REPLACEMENT PARTS WITH THIS APPLIANCE. USING NON-LISTED ACCESSORIES AND REPLACEMENT PARTS (BLOWERS, LOUVRES, TRIMS, GAS COMPONENTS, VENT COMPONENTS, ETC.) COULD RESULT IN A SAFETY HAZARD AND WILL VOID THE LIMITED LIFETIME WARRANTY.

NOT DESIGNED FOR USE WITH A GLASS DOOR. SCREEN MUST BE CLOSED WHEN APPLIANCE IS IN OPERATION.

THIS APPLIANCE MUST NOT BE INSTALLED IN A BEDROOM OR BATHROOM.

This gas appliance should be installed and serviced by a qualified installer to conform with local codes. Installation practices vary from region to region and it is important to know the specifics that apply to your area, for example: in Massachusetts State:

- The appliance off valve must be a “T” handle gas cock.
- The flexible connector must not be longer than 36“.
- The appliance is not approved for installation in a bedroom or bathroom unless the appliance is a direct vent sealed combustion product.
- A carbon monoxide detector is required in all rooms containing gas fired appliances.
- **WARNING:** This product must be installed by a licensed plumber or gas fitter when installed within the commonwealth of Massachusetts.
- Un-vented room appliance shall be installed in accordance with 527 CMR 30.00 and 248 CMR 3.00 through 7.00.
- Sellers of un-vented propane or natural gas-fired space / room appliances shall provide to each purchaser a copy of 527 CMR 30.00 upon the sale of the appliance from http://www.napoleonfireplaces.com/Webshare/installation_manuals/mass_requirements.pdf

In absence of local codes, install the appliance to the current National Fuel Gas Code, ANSI Z223.1 Installation Code which can be obtained from:

American National Standards Institute Inc.	**or**	**National Fire Protection Association Inc.**
1430 Broadway		Batterymarch Park
New York, NY 10018		Quincy, MA 02269

The appliance and its individual shutoff valve must be disconnected from the gas supply piping system during any pressure testing of that system at test pressures in excess of 1/2 psig (3.5 kPa). The appliance must be isolated from the gas supply piping system by closing its individual manual shutoff valve during any pressure testing of the gas supply piping system at test pressures equal to or less than 1/2 psig (3.5 kPa). When installed with a blower the junction box must be electrically connected and grounded in accordance with local codes. In the absence of local codes, use the current ANSI / NFPA 70 National Electric Code. In the case where the blower is equipped with a power cord it must be connected into a properly grounded receptacle. The grounding prong must not be removed from the cord plug.

As long as the required clearance to combustibles is maintained, the most desirable and beneficial location for the appliance is in the center of a building, thereby allowing the most efficient use of the heat created. The location of windows, doors and the traffic flow in the room where the appliance is to be located should be considered.

NATIONAL FIREPLACE INSTITUTE NFI CERTIFIED www.nficertified.org

We suggest that our gas hearth products be installed and serviced by professionals who are certified in the U.S. by the National Fireplace Institute® (NFI) as NFI Gas Specialists

If the appliance is installed directly on carpeting, vinyl tile or other combustible material other than wood flooring, the appliance shall be installed on a metal or wood panel extending the full width and depth. **NOTE: This does not apply to stoves.**

4.2B

2.3 GENERAL INFORMATION

FOR YOUR SATISFACTION, THIS APPLIANCE HAS BEEN TEST-FIRED TO ASSURE ITS OPERATION AND QUALITY!

APPLIANCE		
	NG	**LP**
Altitude (FT)	0-2,000	0-2,000
Max. Input (BTU/HR)	30,000	30,000
Min. Inlet Gas Supply Pressure	4.5" Water Column	11" Water Column
Max. Inlet Gas Supply Pressure	7" Water Column	13" Water Column
Manifold Pressure (Under Flow Conditions)	3.5" Water Column	10" Water Column

No external electricity (110 volts or 24 volts) is required for the gas system operation.

Expansion / contraction noises during heating up and cooling down cycles are normal and are to be expected.

This appliance is equipped with a pilot light safety system referred to as an oxygen depletion sensor and is designed to turn off the appliance if not enough fresh air is available.

2.4 RATING PLATE INFORMATION

For rating plate location, see “DIMENSIONS” section.

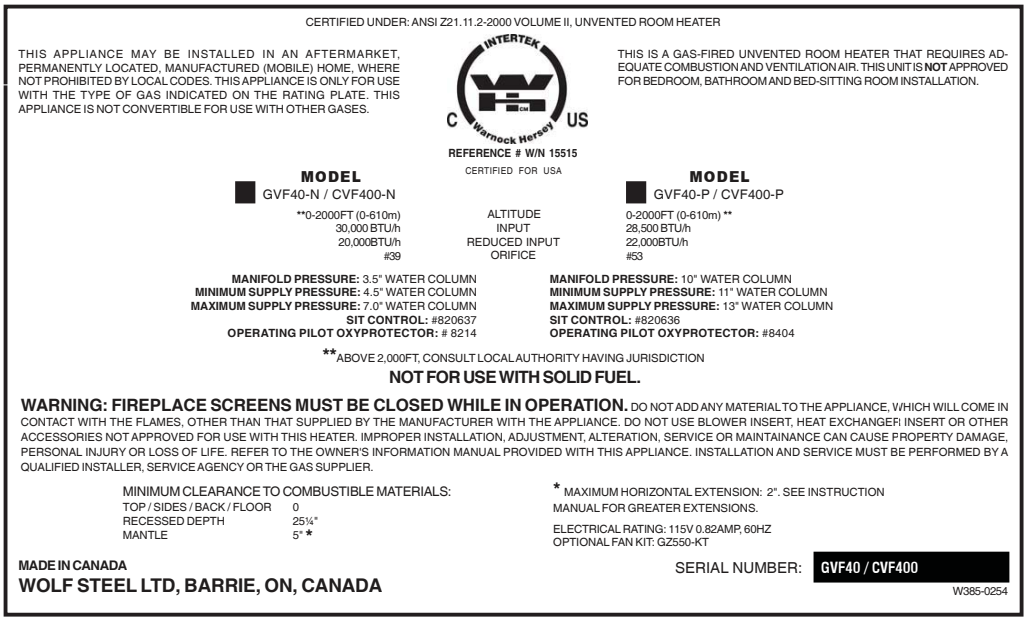

CERTIFIED UNDER: ANSI Z21.11.2-2000 VOLUME II, UNVENTED ROOM HEATER

THIS APPLIANCE MAY BE INSTALLED IN AN AFTERMARKET, PERMANENTLY LOCATED, MANUFACTURED (MOBILE) HOME, WHERE NOT PROHIBITED BY LOCAL CODES. THIS APPLIANCE IS ONLY FOR USE WITH THE TYPE OF GAS INDICATED ON THE RATING PLATE. THIS APPLIANCE IS NOT CONVERTIBLE FOR USE WITH OTHER GASES.

INTERTEK Warnock Hersey C US

REFERENCE # W/N 15515

CERTIFIED FOR USA

THIS IS A GAS-FIRED UNVENTED ROOM HEATER THAT REQUIRES ADEQUATE COMBUSTION AND VENTILATION AIR. THIS UNIT IS **NOT** APPROVED FOR BEDROOM, BATHROOM AND BED-SITTING ROOM INSTALLATION.

MODEL GVF40-N / CVF400-N		**MODEL** GVF40-P / CVF400-P
**0-2000FT (0-610m)	ALTITUDE	0-2000FT (0-610m) **
30,000 BTU/h	INPUT	28,500 BTU/h
20,000BTU/h	REDUCED INPUT	22,000BTU/h
#39	ORIFICE	#53

MANIFOLD PRESSURE: 3.5" WATER COLUMN
MINIMUM SUPPLY PRESSURE: 4.5" WATER COLUMN
MAXIMUM SUPPLY PRESSURE: 7.0" WATER COLUMN
SIT CONTROL: #820637
OPERATING PILOT OXYPROTECTOR: # 8214

MANIFOLD PRESSURE: 10" WATER COLUMN
MINIMUM SUPPLY PRESSURE: 11" WATER COLUMN
MAXIMUM SUPPLY PRESSURE: 13" WATER COLUMN
SIT CONTROL: #820636
OPERATING PILOT OXYPROTECTOR: #8404

**ABOVE 2,000FT, CONSULT LOCAL AUTHORITY HAVING JURISDICTION

NOT FOR USE WITH SOLID FUEL.

WARNING: FIREPLACE SCREENS MUST BE CLOSED WHILE IN OPERATION. DO NOT ADD ANY MATERIAL TO THE APPLIANCE, WHICH WILL COME IN CONTACT WITH THE FLAMES, OTHER THAN THAT SUPPLIED BY THE MANUFACTURER WITH THE APPLIANCE. DO NOT USE BLOWER INSERT, HEAT EXCHANGE/ INSERT OR OTHER ACCESSORIES NOT APPROVED FOR USE WITH THIS HEATER. IMPROPER INSTALLATION, ADJUSTMENT, ALTERATION, SERVICE OR MAINTAINANCE CAN CAUSE PROPERTY DAMAGE, PERSONAL INJURY OR LOSS OF LIFE. REFER TO THE OWNER'S INFORMATION MANUAL PROVIDED WITH THIS APPLIANCE. INSTALLATION AND SERVICE MUST BE PERFORMED BY A QUALIFIED INSTALLER, SERVICE AGENCY OR THE GAS SUPPLIER.

MINIMUM CLEARANCE TO COMBUSTIBLE MATERIALS:

TOP / SIDES / BACK / FLOOR	0
RECESSED DEPTH	25¼"
MANTLE	5" *

* MAXIMUM HORIZONTAL EXTENSION: 2". SEE INSTRUCTION MANUAL FOR GREATER EXTENSIONS.

ELECTRICAL RATING: 115V 0.82AMP, 60HZ
OPTIONAL FAN KIT: GZ550-KT

MADE IN CANADA
WOLF STEEL LTD, BARRIE, ON, CANADA

SERIAL NUMBER: GVF40 / CVF400

W385-0254

3.0 INSTALLATION

3.1 COMBUSTION AND VENTILATION AIR PROVISIONS

This appliance shall not be installed in a confined space or unusually tight construction unless provisions are provided for adequate combustion and ventilation air.

The National Fuel Gas Code, ANSI Z223.1 / NFPA 54 defines a confined space as a space whose volume is less than 50 cubic feet per 1,000 Btu per hour (4.8 m3 per kw) of the aggregate input rating of all appliances installed in that space and an unconfined space as a space whose volume is not less than 50 cubic feet per 1,000 Btu per hour (4.8 m3 per kw) of the aggregate input rating of all appliances installed in that space. Rooms communicating directly with the space in which the appliances are installed, through openings not furnished with doors are considered a part of the unconfined space.

17.1A

The GVF40 is rated at 30,000 BTUs per hour for natural gas and 28,500 BTUs for propane and therefore requires a minimum unconfined space of 1,500 and 1,425 cubic feet respectively.

3.2 DETERMINING CONFINED OR UNCONFINED SPACE

This appliance shall not be installed in a room or space unless the required volume of indoor combustion air is provided by the method described in the National Fuel Gas Code, ANSI Z223.1 / NFPA 54, the International Fuel Gas Code, or applicable local codes.

To determine the volume of the room where the appliance is to be installed, multiply the width x the length x the ceiling height of that room measured in feet. If any adjoining rooms are connected by grilles or openings such as kitchen pass-throughs, etc., the volume of those rooms may be added to the total.

Multiply the room volume by 1000 and divide this amount by 50 to determine the maximum BTU/hr that the space can support with adequate combustion and ventilation air.
Add the Btu/hr of all fuel burning appliances located within the space such as gas furnace, gas water appliance, etc. Do not include direct vent gas appliances which draw their input and output air from and to the outdoors.

⚠ WARNING

IF THE AREA IN WHICH THE APPLIANCE MAY BE OPERATED IS SMALLER THAN THAT DEFINED AS AN UNCONFINED SPACE OR IF THE BUILDING IS OF UNUSUALLY TIGHT CONSTRUCTION, PROVIDE ADEQUATE COMBUSTION AND VENTILATION AIR BY ONE OF THE METHODS DESCRIBED IN THE NATIONAL FUEL GAS CODE ANSI Z223.1/ NFPA 54 , AIR FOR COMBUSTION AND VENTILATION, OR THE APPLICABLE LOCAL CODE.

IF THE AREA IN WHICH THE APPLIANCE MAY BE OPERATED DOES NOT MEET THE REQUIRED VOLUME FOR INDOOR COMBUSTION AIR, COMBUSTION AND VENTILATION AIR SHALL BE PROVIDED BY ONE OF THE METHODS DESCRIBED IN THE ANSI Z223.1 / NFPA 54, THE INTERNATIONAL FUEL GAS CODE, OR APPLICABLE LOCAL CODES.

Unusually tight construction is defined as construction where:

A) Walls and ceilings exposed to the outside atmosphere have a continuous water vapour retarder with a rating of 1 perm (6 x 10-11 kg per pa-sec-m2) or less with openings gasketed or sealed, and
B) Weather stripping has been added on openable windows and doors, and
C) Caulking or sealants are applied to areas such as joints around window and door frames, between sole plates and floors, between wall-ceiling joints, between wall panels, at penetrations for plumbing, electrical, and gas lines, and at other openings.

An unvented room appliance is recommended for use as a secondary heat source rather than as a primary source. Gas combustion produces water vapour which could occur at the rate of approximately one ounce of water for every 1,000 BTU/hr of gas input. During the cold weather season, indoor humidity levels tend to be low. Consequently, this water vapour can enhance the living space. However if a problem should occur:

A) Ensure sufficient combustion and circulation air
B) Use a dehumidifier
C) Do not use the unvented room appliance as a primary heat source

Without sufficient fresh air for proper operation, poor fuel combustion can result. Carbon Monoxide is a result of poor combustion.

If additional fresh air is required, use one of the methods described in the National Fuel Gas Code, ANSI Z223.1, Section 5.3 or the applicable local code.

Room Volume = Length x Width x Height

Max BTU/hr = Room Volume x 1000 / 50

If for example:
The length of the rooms is 10 feet,
The width of Room 1 is 10 feet,
The width of Room 2 is 15 feet,
The height of the rooms is 8 feet.

The volume of Room 1: 10x10x8 = 800 cubic feet
The volume of Room 2: 10x15x8 = 1200 cubic feet

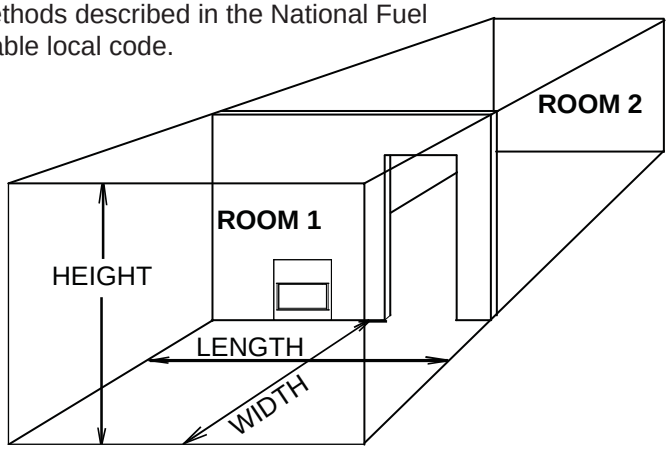

19.1A

EXAMPLE 1:
In this example, because there is no door to the adjoining room, the volume of the adjoining room may be added to the volume of the room with the heater to get a total unconfined space.

The total unconfined space: 800 + 1200 = 2000 cubic feet.

Maximum BTU/h: $\frac{2000 \times 1000}{50}$ = 40,000 BTU/h

19.2

If there are no more fuel burning appliances within this space then the 30,000 BTU/h input of the appliance is suitable to be installed. This also assumes that the construction of this space is not unusually tight.

EXAMPLE 2:
If in this example a solid door separates Room 1 from Room 2, the volume of Room 2 could not be used. In this case the maximum BTU/h would be:

Maximum BTU/h: $\frac{800 \times 1000}{50}$ = 16,000 BTU/h

19.3

This would be considered a confined space since it can not support the 30,000 BTU/h input of the appliance and it would be necessary to provide adequate combustion and ventilation air to Room 1.

3.3 GAS INSTALLATION

⚠ WARNING
RISK OF FIRE, EXPLOSION OR ASPHYXIATION. ENSURE THERE ARE NO IGNITION SOURCES SUCH AS SPARKS OR OPEN FLAMES.
SUPPORT GAS CONTROL WHEN ATTACHING GAS SUPPLY PIPE TO PREVENT DAMAGING GAS LINE.
ALWAYS LIGHT THE PILOT WHETHER FOR THE FIRST TIME OR IF THE GAS SUPPLY HAS RUN OUT WITH THE GLASS DOOR OPENED OR REMOVED. PURGING OF THE GAS SUPPLY LINE SHOULD BE PERFORMED BY A QUALIFIED SERVICE TECHNICIAN. ASSURE THAT A CONTINUOUS GAS FLOW IS AT THE BURNER BEFORE CLOSING THE DOOR. ENSURE ADEQUATE VENTILATION. FOR GAS AND ELECTRICAL LOCATIONS, SEE "DIMENSION" SECTION.
ALL GAS CONNECTIONS MUST BE CONTAINED WITHIN THE APPLIANCE WHEN COMPLETE.
HIGH PRESSURE WILL DAMAGE VALVE. DISCONNECT GAS SUPPLY PIPING BEFORE TESTING GAS LINE AT TEST PRESSURES ABOVE 1/2 PSIG.
VALVE SETTINGS HAVE BEEN FACTORY SET, DO NOT CHANGE.

Installation and servicing to be done by a qualified installer. **Do not use open flame.**

3.3.1 Move the appliance into position and secure.

3.3.2 If equipped with a flex connector the appliance is designed to accept a 1/2" gas supply. Without the connector it is designed to accept a 3/8" gas supply. The appliance is equipped with a manual shut off valve to turn off the gas supply to the appliance.

3.3.3 Connect the gas supply in accordance to local codes. In the absence of local codes, install to the current CAN/CSA-B149.1 Installation Code in Canada or to the current National Fuel Gas Code, ANSI Z223.1 / NFPA 54 in the United States.

3.3.4 When flexing any gas line, support the gas valve so that the lines are not bent or kinked.

3.3.5 The gas line flex-connector should provide sufficient movement to permit shifting the burner assembly on it's side.

3.3.6 Check for gas leaks by brushing on a soap and water solution.

30.1A

3.4 ELECTRICAL CONNECTION

⚠ WARNING

DO NOT CONNECT EITHER THE WALL SWITCH, THERMOSTAT OR GAS VALVE DIRECTLY TO 110 VOLT ELECTRICITY.

For ease of accessibility, an optional remote wall switch or millivolt thermostat may be installed in a convenient location. Route a 2 strand, solid core millivolt wire from the valve to the wall switch or millivolt thermostat. The recommended maximum lead length depends on wire size:

WIRE SIZE	MAX. LENGTH
14 gauge	100 feet
16 gauge	60 feet
18 gauge	40 feet

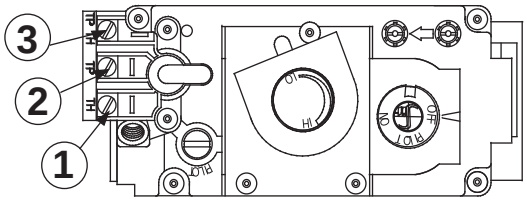

Disconnect the existing wires from terminals 1 and 3 (from the ON/OFF switch) and replace with the leads from the wall switch / millivolt thermostat.

50.1

3.4 MOBILE HOME INSTALLATION

Suitable for mobile home installation where the mobile home has been permanently placed on its site.
This appliance may be installed in an aftermarket permanently located, manufactured (mobile) home, where not prohibited by local codes.
For mobile home installations, the appliance must be fastened in place. It is recommended that the appliance be secured in all installations. See “REPLACEMENTS” section for the levelling / securing kit specific to your appliance.

29.2

4.0 PENINSULA INSTALLATION

4.1 FRAMING

WARNING

RISK OF FIRE!

IN ORDER TO AVOID THE POSSIBILITY OF EXPOSED INSULATION OR VAPOUR BARRIER COMING IN CONTACT WITH THE APPLIANCE BODY, IT IS RECOMMENDED THAT THE WALLS OF THE APPLIANCE ENCLOSURE BE “FINISHED” (IE: DRYWALL / SHEETROCK), AS YOU WOULD FINISH ANY OTHER OUTSIDE WALL OF A HOME. THIS WILL ENSURE THAT CLEARANCE TO COMBUSTIBLES IS MAINTAINED WITHIN THE CAVITY.

DO NOT NOTCH THE FRAMING AROUND THE APPLIANCE STAND-OFFS. FAILURE TO MAINTAIN AIR SPACE CLEARANCE MAY CAUSE OVER HEATING AND FIRE. PREVENT CONTACT WITH SAGGING OR LOOSE INSULATION OR FRAMING AND OTHER COMBUSTIBLE MATERIALS. BLOCK OPENING INTO THE CHASE TO PREVENT ENTRY OF BLOWN-IN INSULATION. MAKE SURE INSULATION AND OTHER MATERIALS ARE SECURED.

WHEN CONSTRUCTING THE ENCLOSURE ALLOW FOR FINISHING MATERIAL THICKNESS TO MAINTAIN CLEARANCES. FRAMING OR FINISHING MATERIAL CLOSER THAN THE MINIMUMS LISTED MUST BE CONSTRUCTED ENTIRELY OF NON-COMBUSTIBLE MATERIALS. MATERIALS CONSISTING ENTIRELY OF STEEL, IRON, BRICK, TILE, CONCRETE, SLATE, GLASS OR PLASTERS, OR ANY COMBINATION THEREOF ARE SUITABLE. MATERIALS THAT ARE REPORTED AS PASSING ASTM E 136, STANDARD TEST METHOD FOR BEHAVIOUR OF MATERIALS IN A VERTICAL TUBE FURNACE AT 750°C AND UL763 SHALL BE CONSIDERED NON-COMBUSTIBLE MATERIALS.

MINIMUM CLEARANCE TO COMBUSTIBLES MUST BE MAINTAINED OR A SERIOUS FIRE HAZARD COULD RESULT.

THE APPLIANCE REQUIRES A MINIMUM ENCLOSURE HEIGHT. MEASURE FROM THE APPLIANCE BASE.

IF STEEL STUD FRAMING KITS WITH CEMENT BOARD ARE PROVIDED, THEY MUST BE INSTALLED.

71.1

It is best to frame your appliance after it is positioned. Use 2x4’s and frame to local building codes.

A = 22 1/8” minus finishing material thickness each side.

To install the appliance face flush with the finished wall, position the framework to accommodate the thickness of the finished wall.

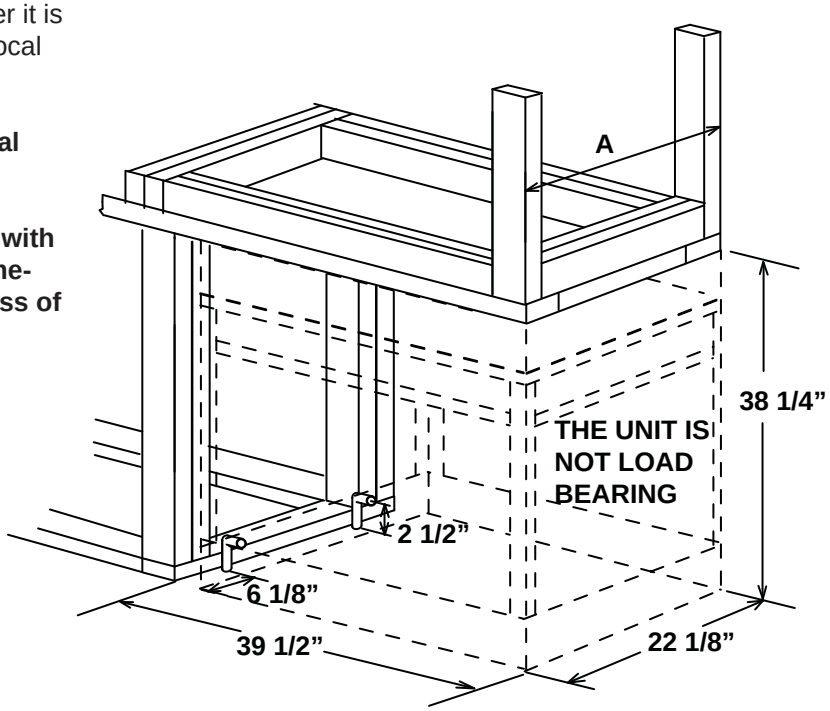

4.2 COUNTER TOP / BAR INSTALLATION

When finishing the appliance, combustible material may rest directly on of the top extension.

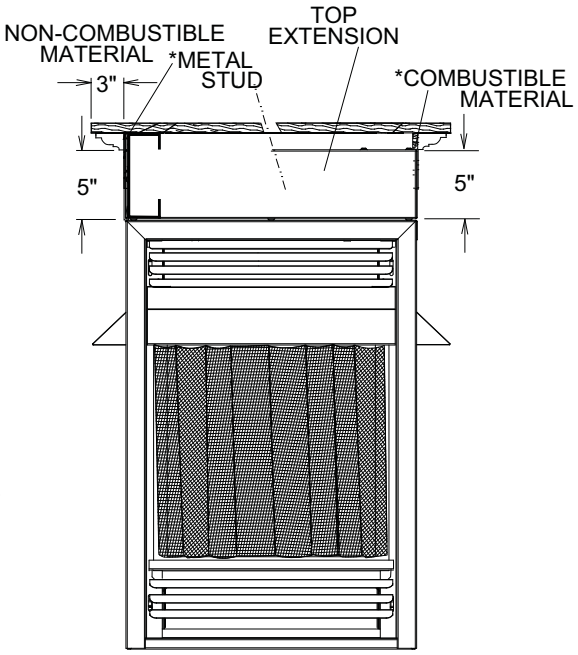

<u>NOTE:</u> Maximum weight tolerance is 400 lbs, provided that it is evenly distributed across the top extensions of the appliance.

In order to achieve a counter top or bar type appearance with the minimum height allowed, framing must be non-combustible and may be done with metal studding attached to the heat shield sides or the upper frame of the appliance.

* The top extension may be removed if non-combustible framing is faced with a non-combustible material placed flush with the front face of the unit and extending from the top of the unit. (Example: cement board) (not supplied). Combustible counter / bar tops must maintain a minimum of 38 inches from the base of the appliance to the underside of the top.

<u>NOTE</u>: Wolf Steel trim and/or surround kits will not totally cover the top extension of the appliance. In order to obtain a smooth transition from the trim / surround to the wall, it is recommended that the top extension be removed and the unit be installed following the preceding procedure.

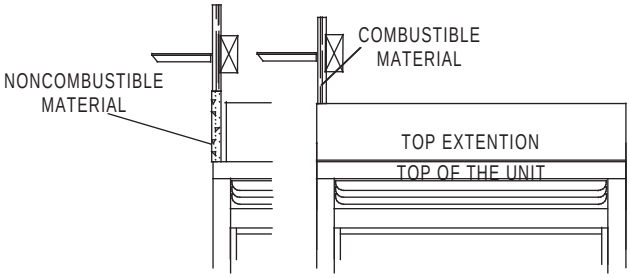

4.3 BRICK PANEL INSTALLATION

Install the base panels as illustrated. The side panel sits under the bracket tab. Holding the side panel in position, bend down the tab to secure.

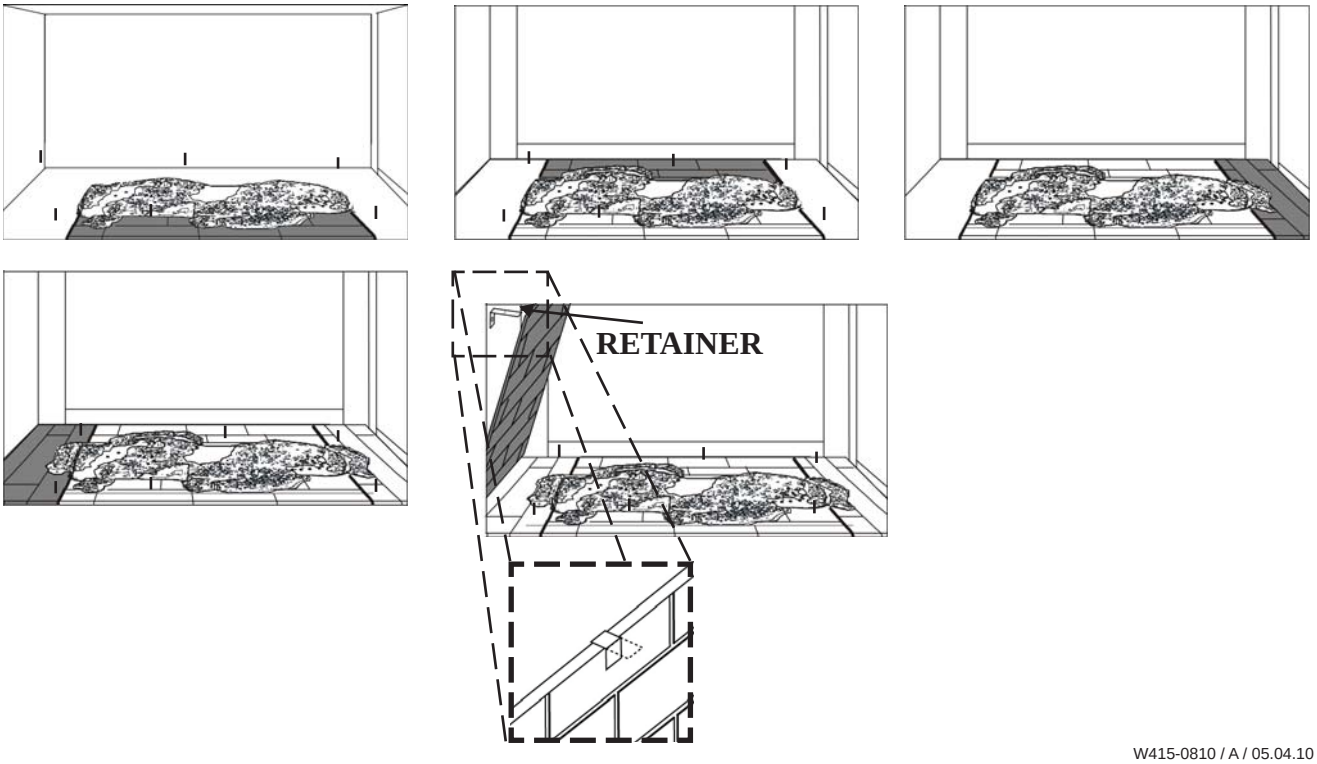

4.4 FACING

Combustible materials may be installed flush with the front of the appliance but must not cover any of the black face-areas of the appliance. Non-combustible material (brick, stone or ceramic tile) may protrude in these areas. It is not necessary to install a hearth extension with this appliance system.

When roughing in the appliance, raise the appliance to accommodate for the thickness of the finished floor materials, i.e. Tile, carpeting, hard wood, which if not planned for will interfere with the opening of the lower access door and the installation of many decorative flashing accessories.

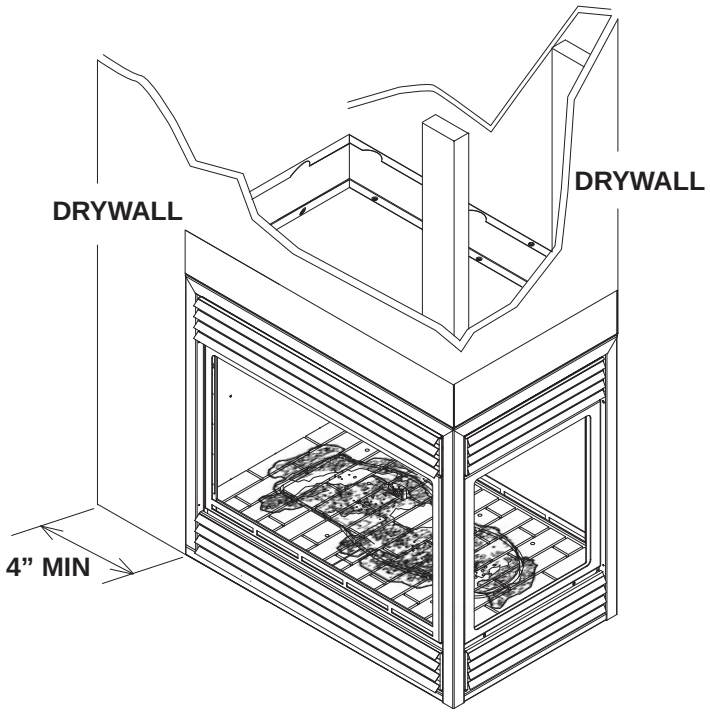

4.5 FINISHING

See “FINISHING” section for complete instructions regarding mantel requirements and installations, log placement and upper and lower louvre attachments.

5.0 OPEN-END INSTALLATION

5.1 FRAMING

⚠ WARNING

RISK OF FIRE!

IN ORDER TO AVOID THE POSSIBILITY OF EXPOSED INSULATION OR VAPOUR BARRIER COMING IN CONTACT WITH THE APPLIANCE BODY, IT IS RECOMMENDED THAT THE WALLS OF THE APPLIANCE ENCLOSURE BE “FINISHED” (IE: DRYWALL / SHEETROCK), AS YOU WOULD FINISH ANY OTHER OUTSIDE WALL OF A HOME. THIS WILL ENSURE THAT CLEARANCE TO COMBUSTIBLES IS MAINTAINED WITHIN THE CAVITY.

DO NOT NOTCH THE FRAMING AROUND THE APPLIANCE STAND-OFFS. FAILURE TO MAINTAIN AIR SPACE CLEARANCE MAY CAUSE OVER HEATING AND FIRE. PREVENT CONTACT WITH SAGGING OR LOOSE INSULATION OR FRAMING AND OTHER COMBUSTIBLE MATERIALS. BLOCK OPENING INTO THE CHASE TO PREVENT ENTRY OF BLOWN-IN INSULATION. MAKE SURE INSULATION AND OTHER MATERIALS ARE SECURED.

WHEN CONSTRUCTING THE ENCLOSURE ALLOW FOR FINISHING MATERIAL THICKNESS TO MAINTAIN CLEARANCES. FRAMING OR FINISHING MATERIAL CLOSER THAN THE MINIMUMS LISTED MUST BE CONSTRUCTED ENTIRELY OF NON-COMBUSTIBLE MATERIALS. MATERIALS CONSISTING ENTIRELY OF STEEL, IRON, BRICK, TILE, CONCRETE, SLATE, GLASS OR PLASTERS, OR ANY COMBINATION THEREOF ARE SUITABLE. MATERIALS THAT ARE REPORTED AS PASSING ASTM E 136, STANDARD TEST METHOD FOR BEHAVIOUR OF MATERIALS IN A VERTICAL TUBE FURNACE AT 750°C AND UL763 SHALL BE CONSIDERED NON-COMBUSTIBLE MATERIALS.

MINIMUM CLEARANCE TO COMBUSTIBLES MUST BE MAINTAINED OR A SERIOUS FIRE HAZARD COULD RESULT.

THE APPLIANCE REQUIRES A MINIMUM ENCLOSURE HEIGHT. MEASURE FROM THE APPLIANCE BASE.

IF STEEL STUD FRAMING KITS WITH CEMENT BOARD ARE PROVIDED, THEY MUST BE INSTALLED.

71.1

It is best to frame your appliance after it is positioned and the vent system is installed. Use 2x4’s and frame to local building codes.

A = 25 1/8” minus finishing material thickness each side.

<u>NOTE:</u> Left corner unit illustrated.
To install the appliance face flush with the finished wall, position the framework to accommodate the thickness of the finished wall.

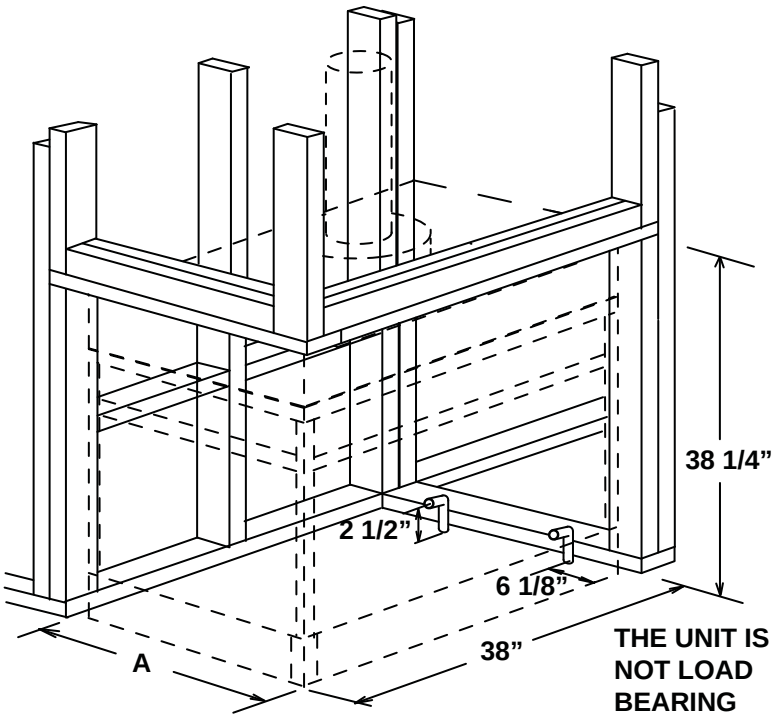

5.2 BRICK PANEL INSTALLATION

Install the base panels as illustrated in on page 11. The side panel sits under the bracket tab. Holding the side panel in position, bend down the tab to secure.

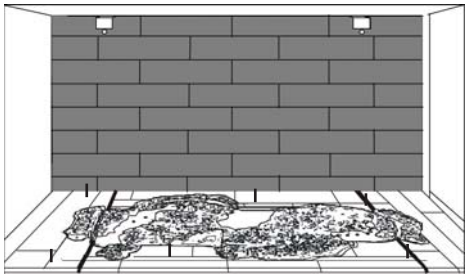

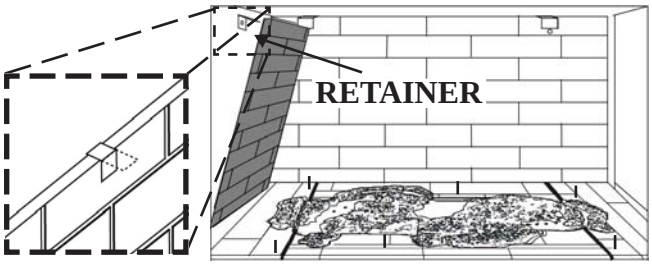

5.3 FACING

Combustible materials may be installed flush with the front of the appliance but must not cover any of the black face-areas of the appliance. Non-combustible material (brick, stone or ceramic tile) may protrude in these areas.

It is not necessary to install a hearth extension with this appliance system.

When roughing in the appliance, raise the appliance to accommodate for the thickness of the finished floor materials, i.e. Tile, carpeting, hard wood, which if not planned for will interfere with the opening of the lower access door and the installation of many decorative flashing accessories.

5.4 FINISHING

See “FINISHING” section for complete instructions regarding mantel requirements and installations, log placement and upper and lower louvre attachments.

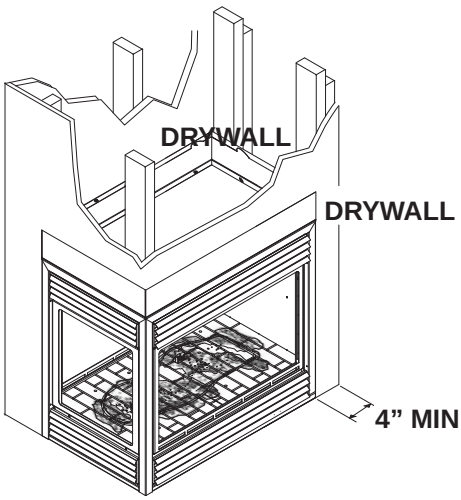

6.0 SEE-THRU INSTALLATION

6.1 FRAMING

⚠ WARNING

RISK OF FIRE!

IN ORDER TO AVOID THE POSSIBILITY OF EXPOSED INSULATION OR VAPOUR BARRIER COMING IN CONTACT WITH THE APPLIANCE BODY, IT IS RECOMMENDED THAT THE WALLS OF THE APPLIANCE ENCLOSURE BE “FINISHED” (IE: DRYWALL / SHEETROCK), AS YOU WOULD FINISH ANY OTHER OUTSIDE WALL OF A HOME. THIS WILL ENSURE THAT CLEARANCE TO COMBUSTIBLES IS MAINTAINED WITHIN THE CAVITY.

DO NOT NOTCH THE FRAMING AROUND THE APPLIANCE STAND-OFFS. FAILURE TO MAINTAIN AIR SPACE CLEARANCE MAY CAUSE OVER HEATING AND FIRE. PREVENT CONTACT WITH SAGGING OR LOOSE INSULATION OR FRAMING AND OTHER COMBUSTIBLE MATERIALS. BLOCK OPENING INTO THE CHASE TO PREVENT ENTRY OF BLOWN-IN INSULATION. MAKE SURE INSULATION AND OTHER MATERIALS ARE SECURED.

WHEN CONSTRUCTING THE ENCLOSURE ALLOW FOR FINISHING MATERIAL THICKNESS TO MAINTAIN CLEARANCES. FRAMING OR FINISHING MATERIAL CLOSER THAN THE MINIMUMS LISTED MUST BE CONSTRUCTED ENTIRELY OF NON-COMBUSTIBLE MATERIALS. MATERIALS CONSISTING ENTIRELY OF STEEL, IRON, BRICK, TILE, CONCRETE, SLATE, GLASS OR PLASTERS, OR ANY COMBINATION THEREOF ARE SUITABLE. MATERIALS THAT ARE REPORTED AS PASSING ASTM E 136, STANDARD TEST METHOD FOR BEHAVIOUR OF MATERIALS IN A VERTICAL TUBE FURNACE AT 750°C AND UL763 SHALL BE CONSIDERED NON-COMBUSTIBLE MATERIALS.

MINIMUM CLEARANCE TO COMBUSTIBLES MUST BE MAINTAINED OR A SERIOUS FIRE HAZARD COULD RESULT.

THE APPLIANCE REQUIRES A MINIMUM ENCLOSURE HEIGHT. MEASURE FROM THE APPLIANCE BASE.

IF STEEL STUD FRAMING KITS WITH CEMENT BOARD ARE PROVIDED, THEY MUST BE INSTALLED.

71.1

It is best to frame your appliance after it is positioned and the vent system is installed. Use 2x4’s and frame to local building codes.

A = 22 1/8” minus finishing material thickness, each side.

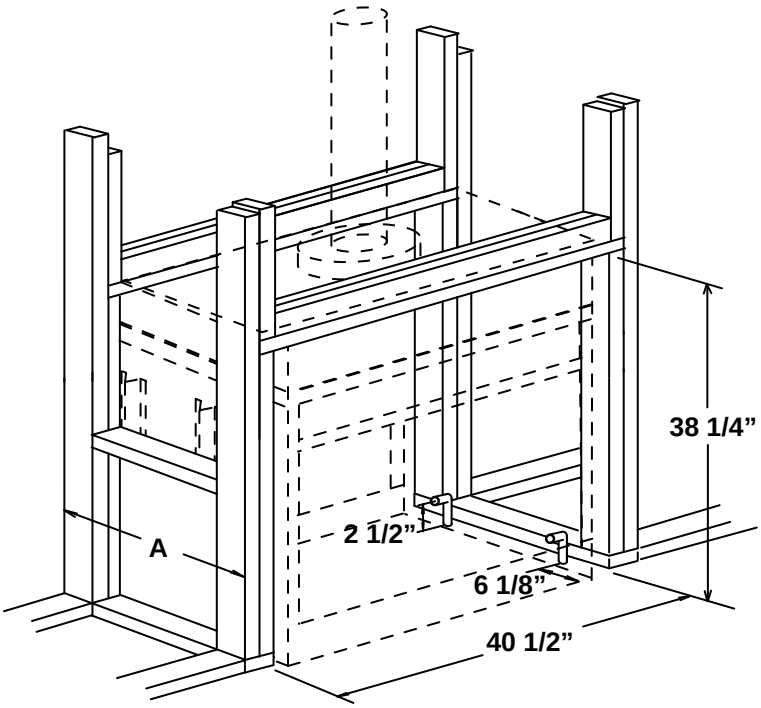

6.2 BRICK PANEL INSTALLATION

Install the base panels as previously illustrated. Both side panels sit under the bracket tab. Holding the side panel in position, bend down the tab to secure.

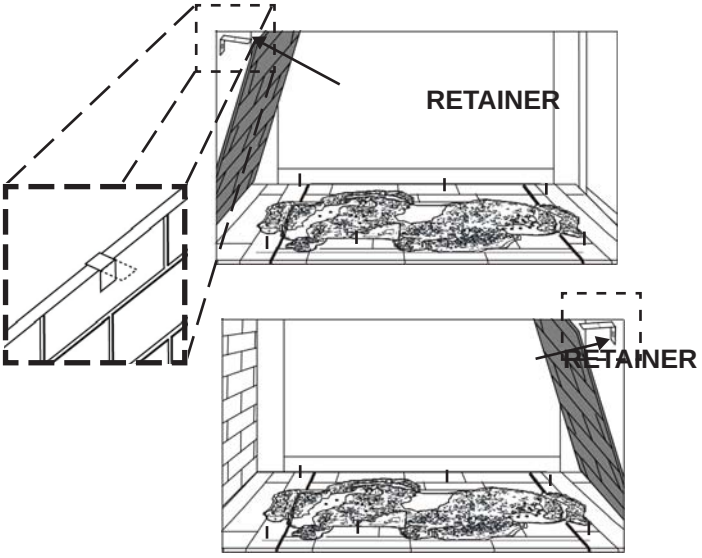

6.3 FACING

Combustible materials may be installed flush with the front of the appliance but must not cover any of the black face-areas of the appliance. Non-combustible material (brick, stone or ceramic tile) may protrude in these areas.
It is not necessary to install a hearth extension with this appliance system.
When roughing in the appliance, raise the appliance to accommodate for the thickness of the finished floor materials, i.e. Tile, carpeting, hard wood, which if not planned for will interfere with the opening of the lower access door and the installation of many decorative flashing accessories.

6.4 FINISHING

See “FINISHING” section for complete instructions regarding mantel requirements and installations, log placement and upper and lower louvre attachments.

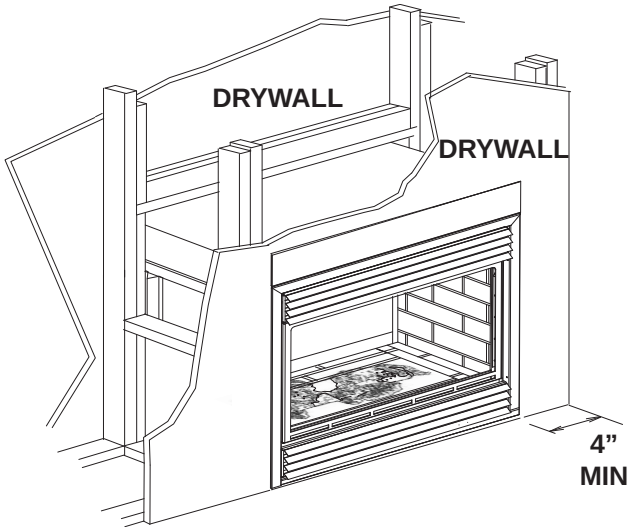

7.0 ISLAND INSTALLATION PROCEDURES

7.1 FRAMING

WARNING

RISK OF FIRE!

IN ORDER TO AVOID THE POSSIBILITY OF EXPOSED INSULATION OR VAPOUR BARRIER COMING IN CONTACT WITH THE APPLIANCE BODY, IT IS RECOMMENDED THAT THE WALLS OF THE APPLIANCE ENCLOSURE BE “FINISHED” (IE: DRYWALL / SHEETROCK), AS YOU WOULD FINISH ANY OTHER OUTSIDE WALL OF A HOME. THIS WILL ENSURE THAT CLEARANCE TO COMBUSTIBLES IS MAINTAINED WITHIN THE CAVITY.

DO NOT NOTCH THE FRAMING AROUND THE APPLIANCE STAND-OFFS. FAILURE TO MAINTAIN AIR SPACE CLEARANCE MAY CAUSE OVER HEATING AND FIRE. PREVENT CONTACT WITH SAGGING OR LOOSE INSULATION OR FRAMING AND OTHER COMBUSTIBLE MATERIALS. BLOCK OPENING INTO THE CHASE TO PREVENT ENTRY OF BLOWN-IN INSULATION. MAKE SURE INSULATION AND OTHER MATERIALS ARE SECURED.

WHEN CONSTRUCTING THE ENCLOSURE ALLOW FOR FINISHING MATERIAL THICKNESS TO MAINTAIN CLEARANCES. FRAMING OR FINISHING MATERIAL CLOSER THAN THE MINIMUMS LISTED MUST BE CONSTRUCTED ENTIRELY OF NON-COMBUSTIBLE MATERIALS. MATERIALS CONSISTING ENTIRELY OF STEEL, IRON, BRICK, TILE, CONCRETE, SLATE, GLASS OR PLASTERS, OR ANY COMBINATION THEREOF ARE SUITABLE. MATERIALS THAT ARE REPORTED AS PASSING ASTM E 136, STANDARD TEST METHOD FOR BEHAVIOUR OF MATERIALS IN A VERTICAL TUBE FURNACE AT 750°C AND UL763 SHALL BE CONSIDERED NON-COMBUSTIBLE MATERIALS.

MINIMUM CLEARANCE TO COMBUSTIBLES MUST BE MAINTAINED OR A SERIOUS FIRE HAZARD COULD RESULT.

THE APPLIANCE REQUIRES A MINIMUM ENCLOSURE HEIGHT. MEASURE FROM THE APPLIANCE BASE.

IF STEEL STUD FRAMING KITS WITH CEMENT BOARD ARE PROVIDED, THEY MUST BE INSTALLED.

71.1

It is best to frame your appliance after it is positioned. Use 2x4’s and frame to local building codes.

A = *22 “ minus finishing material thickness each side.*

To install the appliance face flush with the finished wall, position the framework to accommodate the thickness of the finished wall.

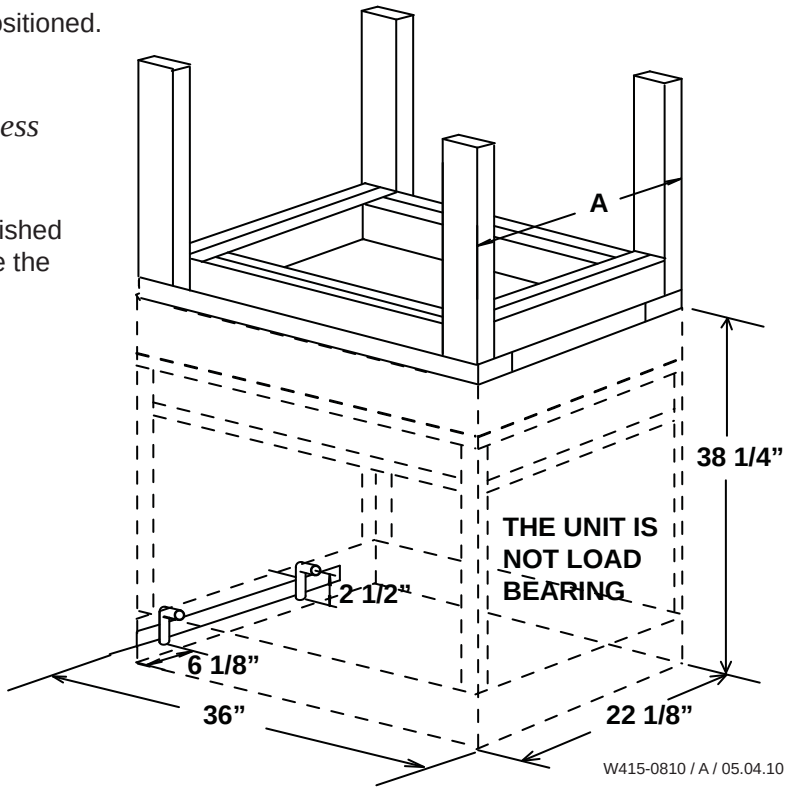

7.2 BRICK PANEL INSTALLATION

Install the base panels, see “PENINSULA INSTALLATION PROCEDURES” section.

7.3 FACING

Combustible materials may be installed flush with the front of the appliance but must not cover any of the black face-areas of the appliance. Non-combustible material (brick, stone or ceramic tile) may protrude in these areas.
It is not necessary to install a hearth extension with this appliance system.
When roughing in the appliance, raise the appliance to accommodate for the thickness of the finished floor materials, i.e. Tile, carpeting, hard wood, which if not planned for will interfere with the opening of the lower access door and the installation of many decorative flashing accessories.

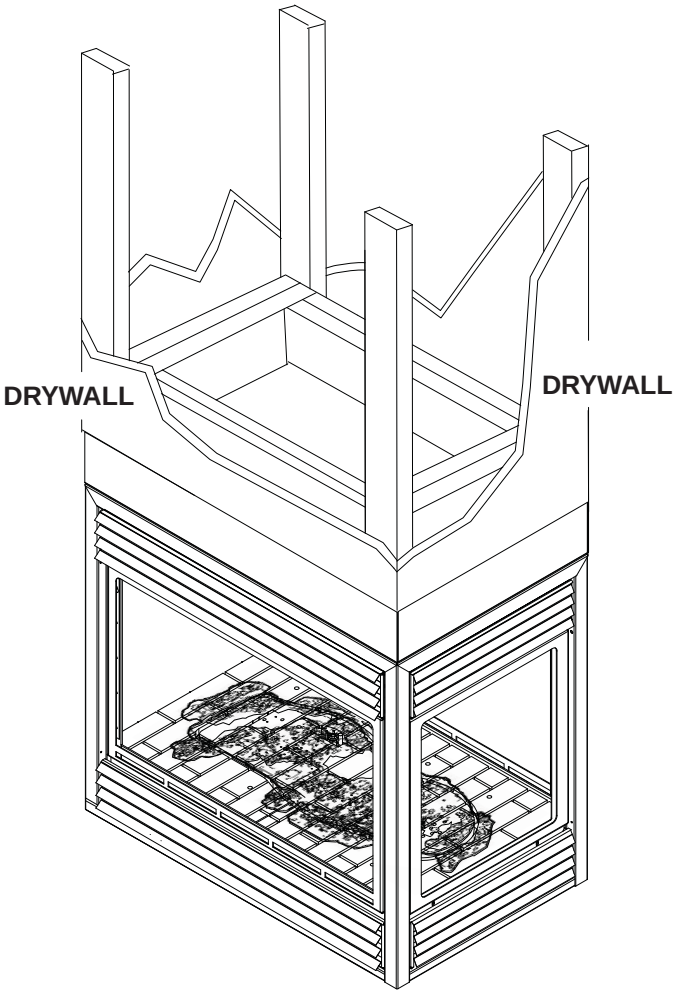

7.4 FINISHING

See “FINISHING” section for complete instructions regarding mantel requirements and installations, log placement and upper and lower louvre attachments.

8.0 FINISHING

8.1 MINIMUM MANTEL CLEARANCES

⚠ WARNING

RISK OF FIRE, MAINTAIN ALL SPECIFIED AIR SPACE CLEARANCES TO COMBUSTIBLES. FAILURE TO COMPLY WITH THESE INSTRUCTIONS MAY CAUSE A FIRE OR CAUSE THE APPLIANCE TO OVERHEAT. ENSURE ALL CLEARANCES (I.E. BACK, SIDE, TOP, VENT, MANTEL, FRONT, ETC.) ARE CLEARLY MAINTAINED.

WHEN USING PAINT OR LACQUER TO FINISH THE MANTEL, THE PAINT OR LACQUER MUST BE HEAT RESISTANT TO PREVENT DISCOLOURATION.

73.1

Combustible mantel clearance can vary according to the mantel depth. Use the graph to help evaluate the clearance needed. The four-sided top extension piece may be removed if non-combustible framing is faced with a non-combustible material.

Dashed lines are suitable mantel sizes and clearances when a non-combustible facing is used.

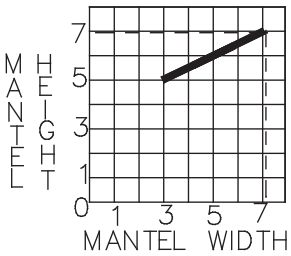

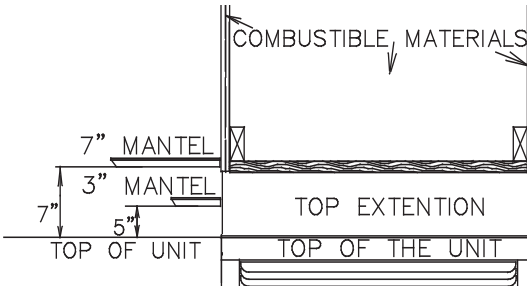

8.2 LOG PLACEMENT

⚠ WARNING

LOGS MUST BE PLACED IN THEIR EXACT LOCATION IN THE APPLIANCE. DO NOT MODIFY THE PROPER LOG POSITIONS, SINCE APPLIANCE MAY NOT FUNCTION PROPERLY AND DELAYED IGNITION MAY OCCUR.

THE LOGS ARE FRAGILE AND SHOULD BE HANDLED WITH CARE.

DO NOT PLACE CHARCOAL EMBERS, VERMICULITE OR CHARCOAL LUMPS ON THIS BURNER.

ALL PREVIOUSLY APPLIED LOOSE MATERIAL (GLOWING EMBERS) MUST BE REMOVED PRIOR TO REAPPLICATION.

DO NOT CHANGE OR SUBSTITUTE THE GLOWING EMBER MATERIAL PROVIDED WITH THE APPLIANCE. IF REPLACING, USE ONLY REPLACEMENT GLOWING EMBERS AVAILABLE FROM YOUR LOCAL AUTHORIZED DEALER / DISTRIBUTOR.

76.2A

PHAZER™ logs and charcoal embers, exclusive to Napoleon® fireplaces, provide a unique and realistic glowing effect that is different in every installation.

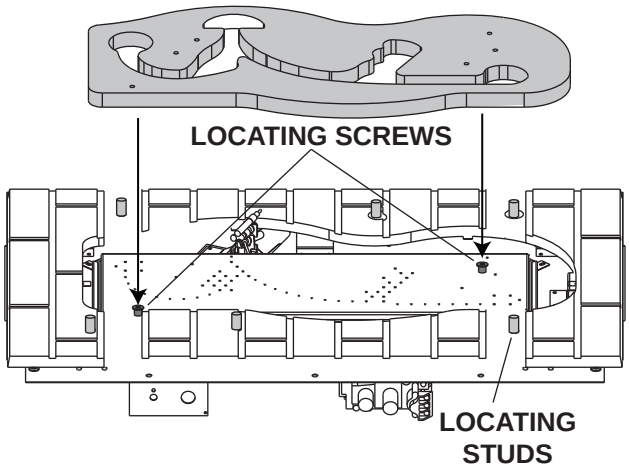

8.2.1 Looking at the unit from the valve side, place the fibre burner onto the locating studs on the pan burner as illustrated above. It is important not to cover any burner ports with the fibre burner.

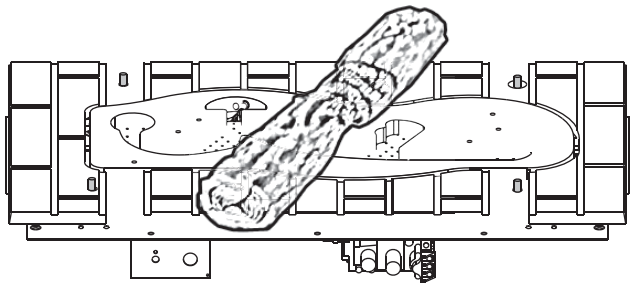

8.2.2 Place log #1 diagonally across the textured burner cover onto the pins. The texture is designed to cradle the underside of the log.

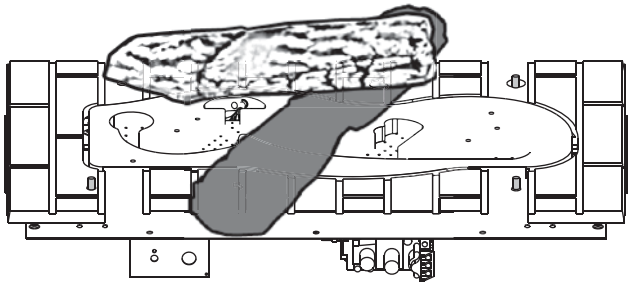

8.2.2 Depending on the type of installation, the view of the log positioning will reverse. Here the lower end of log #2 rests near the back left corner of the firebox on the locating pin. The upper end sits on top of log #1, inside the groove on log #2.

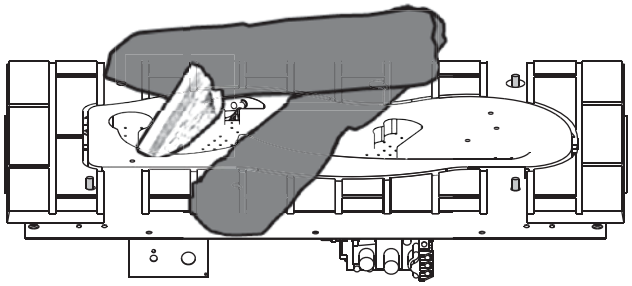

8.2.3 Log # 3 is made up of two pieces, a and b. Piece #3a is the base of log #3. The base sits diagonally in the designated area located between logs #1 and fits tight up against #2.

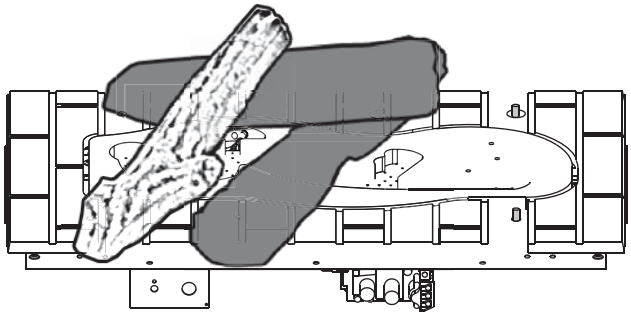

8.2.5 When pieces #3a and #3b are attached to create log #3, the upper end of log #3 should rest in the groove, on top of log # 2. The slot in the underside of piece #3b fits over #3a. Place the end of piece #3b onto the pin.

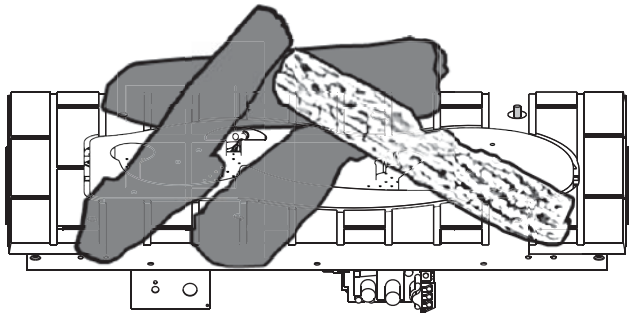

8.2.6 As with log # 1, log #4 is also cradled by the texture of the burner cover and the pin in the base. Position log #4 so that the lower end fits onto the pin. The upper end rests against the moulded locator on the top of log # 1.

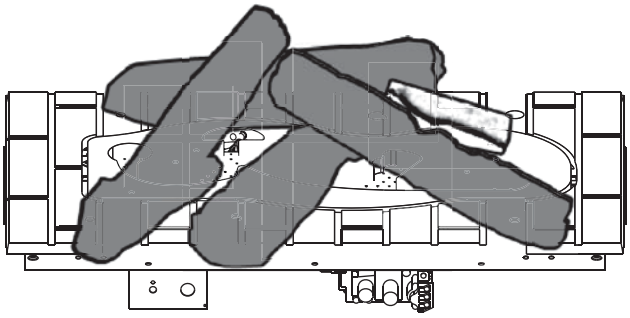

8.2.7 Like log #3, log #5 also comes in two pieces. The base (#5a) slopes outwards between logs #2 and #4.
As with pieces #3a & b, piece #5b fits over piece #5a. Place the end of piece #5b onto the pin.

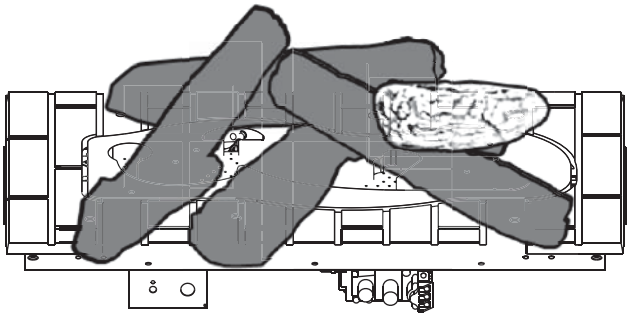

8.2.8 The upper end of log #5 rests in the groove, on top of log #4 and creates the final appearance of the log set.

Log colours may vary. During the initial use of the appliance, the colours will become more uniform as colour pigments burn in during the heat activated curing process.
Positioning the logs improperly will cause flame impingement and carboning.
Blocked burner ports can cause an incorrect flame pattern, carbon deposits and delayed ignition. Phazer™ logs glow when exposed to direct flame. Use only certified Phazer™ logs available from your authorized dealer / distributor.

8.3 CHARCOAL EMBERS

Randomly place the charcoal embers along the front and sides of the log support tray in a realistic manner.
Fine dust found in the bottom of the bag should not be used.
<u>NOTE:</u> Charcoal embers are not to be placed on the burner.

32.1

8.4 HOOD

⚠ WARNING

APPLIANCE SCREENS MUST BE CLOSED WHILE THE APPLIANCE IS IN OPERATION.

The appliance must not be used when the hood is removed. Hook the hood over the lip of the curtain support plate.

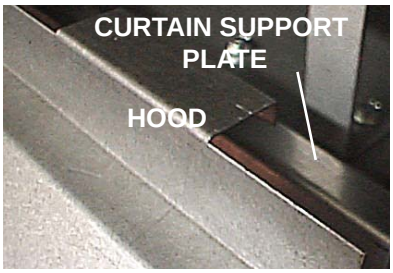

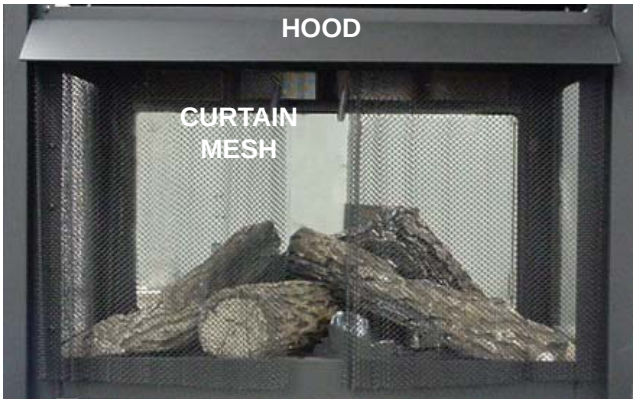

8.5 LOUVRE INSTALLATION

<u>NOTE:</u> The protective wrap on plated parts is best removed when the assembly is at room temperature but this can be improved if the assembly is warmed, using a hair dryer or similar heat source.

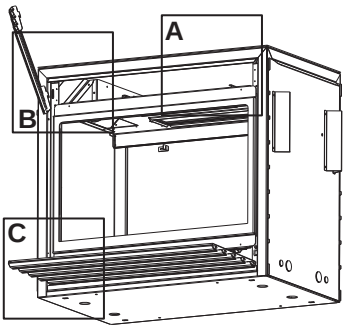

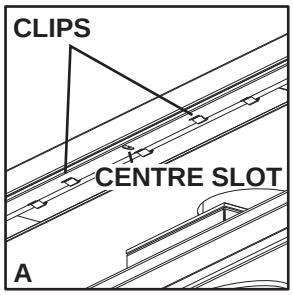

HOOD
Attach the hood by pressing the top flange into the clips along the top of the louvre opening. Secure using a screw through the centre slot.

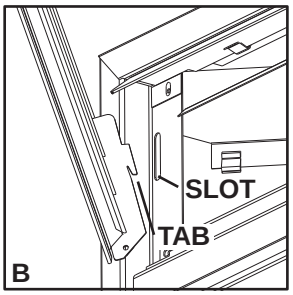

UPPER LOUVRES
Insert the louvre tabs into the slots located at the top left and right corners of the unit.

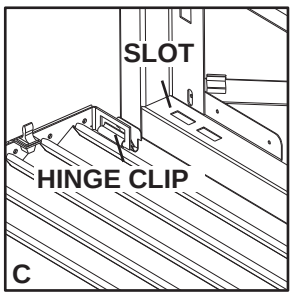

LOWER LOUVRES
Insert the hinge clips into the slots located at the bottom left and right corners of the unit. To remove the louvres, pull the back tabs of the clips forward, while pushing the louvre assembly back. Lift the clip.

57.2

8.6 HEAT SHIELD STAND-OFF REMOVAL

When using a non-combustible finishing material, the stand-offs may be removed, by removing the set screw in the centre and sliding the stand-offs out of the mounting clips.

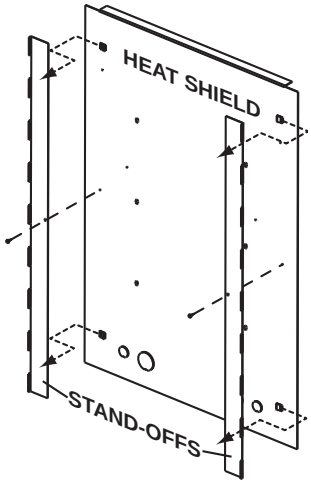

END HEAT SHIELD SHOWN

8.7 LOGO PLACEMENT

Remove the backing of the logo supplied and place on the screen cover, as indicated.

9.0 OPTIONAL BLOWER INSTALLATION

⚠ WARNING

RISK OF FIRE AND ELECTRICAL SHOCK.

TURN OFF THE GAS AND ELECTRICAL POWER BEFORE SERVICING THIS APPLIANCE.

USE ONLY WOLF STEEL APPROVED OPTIONAL ACCESSORIES AND REPLACEMENT PARTS WITH THIS APPLIANCE. USING NON-LISTED ACCESSORIES (BLOWERS, DOORS, LOUVRES, TRIMS, GAS COMPONENTS, VENTING COMPONENTS, ETC.) COULD RESULT IN A SAFETY HAZARD AND WILL VOID THE WARRANTY AND CERTIFICATION.

ENSURE THAT THE FAN'S POWER CORD IS NOT IN CONTACT WITH ANY SURFACE OF THE APPLIANCE TO PREVENT ELECTRICAL SHOCK OR FIRE DAMAGE. DO NOT RUN THE POWER CORD BENEATH THE APPLIANCE.

THE WIRE HARNESS PROVIDED IN THE BLOWER KIT IS A UNIVERSAL HARNESS. WHEN INSTALLED, ENSURE THAT ANY EXCESS WIRE IS CONTAINED, PREVENTING IT FROM MAKING CONTACT WITH MOVING OR HOT OBJECTS.

51.5

THIS BLOWER IS NOT RECOMMENDED FOR THE 4 SIDED INSTALLATION

INSTALLATION TO BE DONE BY A QUALIFIED INSTALLER and must be electrically connected and grounded in accordance with local codes.In the absence of local codes, use the current ANSI/NFPA 70 National Electrical Code in the United States. Remove the blower from its mounting bracket and attach to the bracket supplied with the appliance. This bracket is found secured on the mounting stud located at the bottom of the vent side wall.

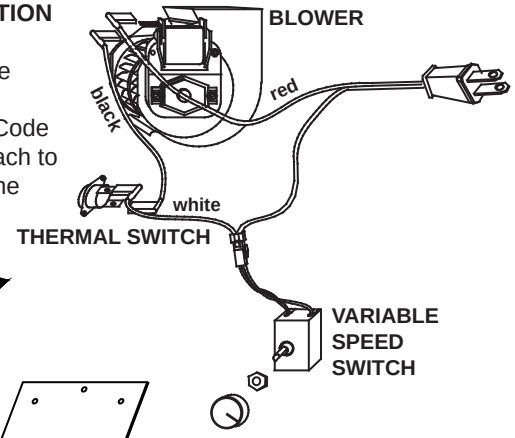

Route a grounded 2-wire, 60Hz power cable to the junction box. At this point, it must be strained relieved and insulatied.

The blower bracket contains two holes that allow the blower to be positioned away from the intended gas supply hole.

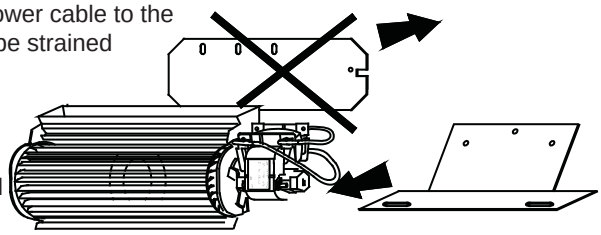

Position the vibration reducing pad, centred, onto the threaded stud, piercing a hole into the pad. The blower must be able to be positioned entirely onto the pad.

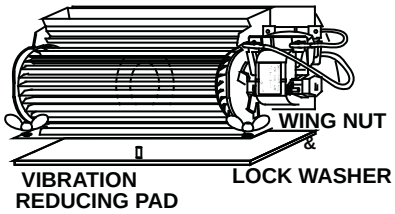

Tilt the blower onto its side and slide it past the controls. Position the blower under the clip and onto the stud. Secure with a wing nut.

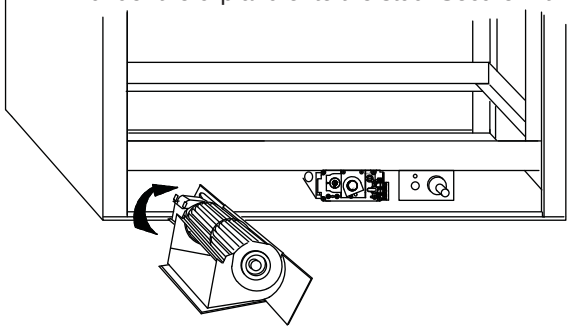

Remove the thermal switch bracket from the top of the firebox.
Remove the thermal switch from the bracket supplied in the blower kit and install the thermal switch into the appliance bracket. Then replace the bracket in the location it was removed.
Connect the two ends of the unattached wires by the bracket to the thermal switch.
Connect the opposite ends of the wires to the red and black leads of the blower harness.

Attach and secure the variable speed switch using the nut provided. Plug the harness cord into the recepticle.
The wire harness provided in this kit is a universal harness. When installed, ensure that any excess wire is contained, preventing it from making contact with moving or hot objects.
Drywall dust will penetrate into the blower bearings, causing irreparable damage.
Care must be taken to prevent drywall dust from coming into contact with the blower or its compartment. Any damage resulting from this condition is not covered by the warranty policy.
Because the blower is thermally activated, when turned on, it will automatically start approximately 10 minutes after lighting the appliance and will run for approximately 30 - 45 minutes after the appliance has been turned off. Use of the fan increases the output of heat.

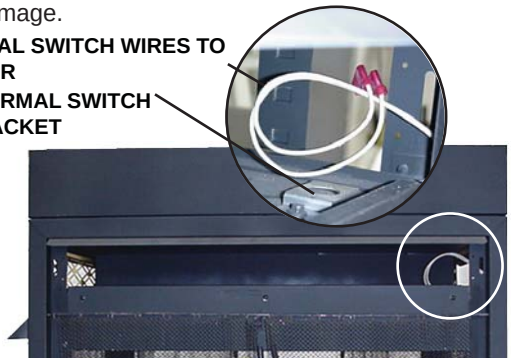

51.3

10.0 OPERATION

⚠ WARNING

IF YOU DO NOT FOLLOW THESE INSTRUCTIONS EXACTLY, A FIRE OR EXPLOSION MAY RESULT CAUSING PROPERTY DAMAGE, PERSONAL INJURY OR LOSS OF LIFE.

IF APPLICABLE ALWAYS LIGHT THE PILOT WHETHER FOR THE FIRST TIME OR IF THE GAS SUPPLY HAS RUN OUT WITH THE GLASS DOOR OPENED OR REMOVED.

If appliance shuts off, do not relight until you provide fresh air. If appliance keeps shutting off, have it serviced. Keep burner and control compartment clean.

When lit for the first time, the appliance will emit a slight odour for a few hours. This is a normal temporary condition caused by the curing of the logs and the "burn-in" of internal paints and lubricants used in the manufacturing process and will not occur again. After extended periods of non-operation such as following a vacation or a warm weather season, the appliance may emit a slight odour for a few hours. This is caused by dust particles burning off. In both cases, open a window to sufficiently ventilate the room.

FOR YOUR SAFETY READ BEFORE LIGHTING:

- This appliance is equipped with a pilot which must be lit by hand while following these instructions exactly.
- Before operating smell all around the appliance area for gas and next to the floor because some gas is heavier than air and will settle on the floor.
- Use only your hand to push in and turn the gas control knob. Never use tools. If the knob will not push in and turn by hand, do not try to repair it. Call a qualified service technician. Force or attempted repair may result in a fire or explosion.
- Do not use this appliance if any part has been under water. Immediately call a qualified service technician to inspect the appliance and replace any part of the control system and any gas control which has been under water.

WHAT TO DO IF YOU SMELL GAS:

- Do not try to light any appliance.
- Do not touch any electric switch; do not use any phone in your building.
- Immediately call your gas supplier from a neighbour's phone. Follow the gas supplier's instructions.
- If you cannot reach your gas supplier, call the fire department.

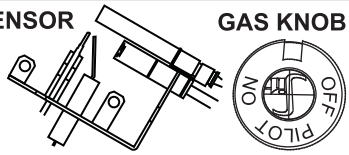

LIGHTING INSTRUCTIONS:

When lighting and re-lighting, the gas knob cannot be turned from pilot to off unless the knob is depressed.

A. STOP! Read the above safety information on this label.
B. Set the thermostat to lowest setting.
C. Turn off all electric power to the appliance.
D. Open the control door. Turn the gas knob clockwise to off.
E. Wait five (5) minutes to clear out any gas. If you smell gas including near the floor, STOP! Follow "B" in the above safety information on this label. If you don't smell gas go to the next step.
F. Find pilot located in front of the back log.
G. Turn gas knob counter-clockwise to pilot.
H. Depress and hold gas knob while lighting the pilot with the push button ignitor. Keep knob fully depressed for one minute, then release. If pilot does not continue to burn repeat steps 3 through 7.
I. With pilot lit, turn gas knob counter-clockwise to on. When the pilot has been turned off, ignition of the main burner may be delayed from 1-2 minutes. When the pilot has been left burning, ignition of the main burner should occur almost immediatley.

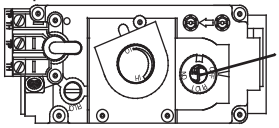

J. If equipped with remote on-off switch, main burner may not come on when you turn the valve to on. Remote switch must be in the on position to ignite burner.
K. Turn on all electric power to the appliance.

TO TURN OFF GAS

A. Turn off all electric power to the appliance if service is to be performed.
B. Push in gas control knob slightly and turn clockwise to off. Do not force.

47.1

11.0 ADJUSTMENT

11.1 VENTURI ADJUSTMENT

⚠ WARNING

CARBON CAN BE DISTRIBUTED IN SURROUNDING LIVING AREA IF THE AIR SHUTTER IS IMPROPERLY ADJUSTED.

49.5

This appliance has an air shutter that has been factory set open according to the chart below:

Regardless of venturi orientation, closing the air shutter will cause a more yellow flame, but can lead to carboning. Opening the air shutter will cause a more blue flame, but can cause flame lifting from the burner ports. The flame may not appear yellow immediately; allow 15 to 30 minutes for the final flame color to be established.

AIR SHUTTER ADJUSTMENT MUST ONLY BE DONE BY A QUALIFIED INSTALLER!

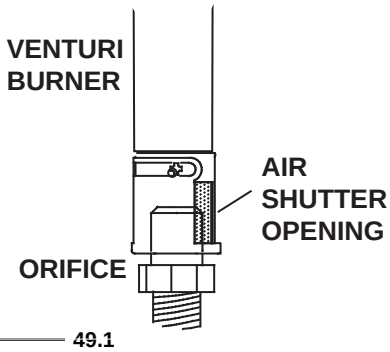

49.1

AIR SHUTTER OPENINGS	
NG	1/4”
LP	7/16”

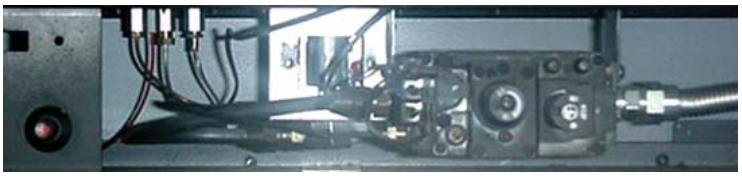

11.2 FLAME CHARACTERISTICS

It’s important to periodically perform a visual check of the pilot and burner flames. Compare them to the illustrations provided. If any flames appear abnormal call a service person.

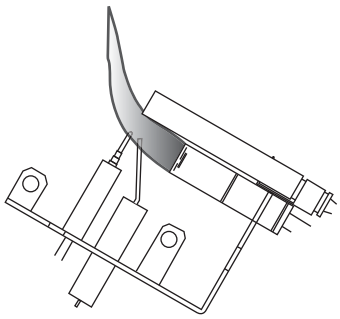

54.5

11.3 FLAME ADJUSTMENT

Turn clockwise to increase flame height

FLAME ADJUSTMENT KNOB

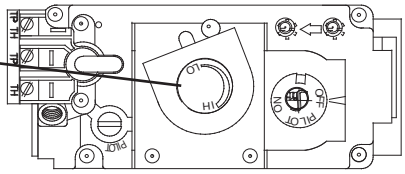

12.0 MAINTENANCE

⚠ WARNING

TURN OFF THE GAS AND ELECTRICAL POWER BEFORE SERVICING THE APPLIANCE.

APPLIANCE MAY BE HOT, DO NOT SERVICE UNTIL APPLIANCE HAS COOLED.

DO NOT USE ABRASIVE CLEANERS.

CAUTION: Label all wires prior to disconnection when servicing controls. Wiring errors can cause improper and dangerous operation. Verify proper operation after servicing. This appliance and its venting system should be inspected before use and at least annually by a qualified service person. The appliance area must be kept clear and free of combustible materials, gasoline or other flammable vapors and liquids. The flow of combustion and ventilation air must not be obstructed.

1. In order to properly clean the burner and pilot assembly, remove the logs, rocks and/or glass to expose both assemblies.
2. Keep the control compartment, media, burner, air shutter opening and the area surrounding the logs clean by vacuuming or brushing, at least once a year.
3. Check to see that all burner ports are burning. Clean out any of the ports which may not be burning or are not burning properly.
4. Check to see that the pilot flame is large enough to engulf the flame sensor and/or thermocouple / thermopile as well as reaches the burner.
5. Replace the cleaned logs, rocks or glass. Failure to properly position the media may cause carboning which can be distributed in the surrounding living area.
6. Check to see that the main burner ignites completely on all openings when turned on. A 5 to 10 second total light-up period is satisfactory. If ignition takes longer, consult your local authorized dealer / distributor.
7. Check that the gasketing on the sides, top and bottom of the door is not broken or missing. Replace if necessary.
8. If for any reason the vent air intake system is disassembled, re-install and re-seal per the instructions provided for the initial installation.

40.1

12.1 OXYGEN DEPLETION SENSOR PILOT CLEANING

This procedure must be performed by a qualified service person!
Inspect the pilot for any visible contamination or debris (usually lint, pet hair, spider webs, carpet fibre, etc.) and remove.

Disconnect the pilot from the pilot tubing line, using a 7/16” wrench. Blow out the housing in the same direction as the gas flow. Re-install the pilot tube, turn on the gas and check for leaks.

If this does not improve the performance, replace the ODS with an exact replacement. The device is tamper resistant with no field serviceable parts.

CORRECT PILOT FLAME
(Clean, stable, pronounced blue flame).

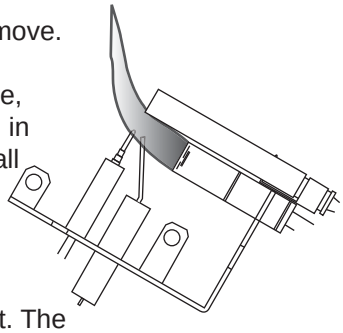

INCORRECT PILOT FLAME
(Flame lifts upwards, becomes unstable with more of an orange tip).

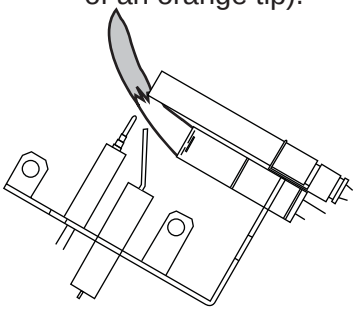

46.1

12.2 CARE OF PLATED PARTS

If the appliance is equipped with plated parts, you must clean fingerprints or other marks from the plated surfaces before operating the appliance for the first time. Use a glass cleaner or vinegar and towel to clean. If not cleaned properly before operating for the first time, the marks can cause permanent blemishes on the plating. After the plating is cured, the fingerprints and oils will not affect the finish and little maintenance is required, just wipe clean as needed. Prolonged high temperature burning with the door ajar may cause discolouration on plated parts.

NOTE: The protective wrap on plated parts is best removed when the assembly is at room temperature but this can be improved if the assembly is warmed, using a hair dryer or similar heat source.

6.1

13.0 REPLACEMENTS

Contact your dealer or the factory for questions concerning prices and policies on replacement parts. Normally all parts can be ordered through your Authorized dealer / distributor.

FOR WARRANTY REPLACEMENT PARTS, A PHOTOCOPY OF THE ORIGINAL INVOICE WILL BE REQUIRED TO HONOUR THE CLAIM.

When ordering replacement parts always give the following information:

- Model & Serial Number of appliance
- Installation date of appliance
- Part number
- Description of part
- Finish

*** IDENTIFIES ITEMS WHICH ARE NOT ILLUSTRATED. FOR FURTHER INFORMATION, CONTACT YOUR AUTHORIZED DEALER.**

WARNING

FAILURE TO POSITION THE PARTS IN ACCORDANCE WITH THIS MANUAL OR FAILURE TO USE ONLY PARTS SPECIFICALLY APPROVED WITH THIS APPLIANCE MAY RESULT IN PROPERTY DAMAGE OR PERSONAL INJURY.

41.1

COMMON COMPONENTS		
REF	**PART NO.**	**DESCRIPTION**
1*	W550-0001	CHARCOAL EMBERS
2*	GD-660	STANDARD WALL SWITCH & 20FT OF WIRE
3*	W385-0334	NAPOLEON® LOGO
4	GL-657	BGD40 LOGSET
5	W135-0284	LOG#1
6	W135-0285	LOG#2
7	W135-0286	LOG#3 - PIECE A
8	W135-0287	LOG#3 - PIECE B
9	W135-0288	LOG#4
10	W135-0289	LOG#5 - PIECE A
11	W135-0290	LOG#5 - PIECE B
12	W475-0511	END FIBRE BRICK PANEL - FOR BURNER
13	W475-0512	END FIBRE BRICK PANEL - FOR BURNER
14	W475-0514	SIDE FIBRE BRICK PANEL - FOR BURNER
15	W475-0513	SIDE FIBRE BRICK PANEL - FOR BURNER
16	W335-0050	HOOD
17	W565-0058	CURTAIN MESH
18	W555-0033	CURTAIN ROD
19	W080-0742	ROD SUPPORT BRACKET
20	W630-0010	BLACK TASSELS
21	W500-0194	CURTAIN SUPPORT PLATE
22	W200-0114	SIDE DOOR COVER

COMPONENTS UNIQUE TO OPEN END UNIT		
REF	**PART NO.**	**DESCRIPTION**
23	N010-0327	SIDE DOOR HEAT SHIELD
24	W475-0517	SIDE BRICK PANEL - FOR WALL
25	W500-0192	SIDE BRICK PANEL RETAINER
26	W335-0027	SHORT HOOD
27	W565-0060	SHORT CURTAIN MESH
28	W555-0039	SHORT CURTAIN ROD
29	W585-0126	END DOOR HEAT SHIELD
30	N010-0326	END DOOR COVER
31	W500-0192	END BRICK PANEL RETAINER
32	W475-0516	END BRICK PANEL
29	W585-0126	END DOOR HEAT SHIELD

COMPONENTS UNIQUE TO SEE-THRU UNIT		
REF	**PART NO.**	**DESCRIPTION**
30	N010-0326	END DOOR COVER
31	W500-0192	END BRICK PANEL RETAINER
32	W475-0516	END BRICK PANEL
26	W335-0027	SHORT HOOD

COMPONENTS UNIQUE TO PENINSULA UNIT		
REF	**PART NO.**	**DESCRIPTION**
27	W565-0060	SHORT CURTAIN MESH
28	W555-0039	SHORT CURTAIN ROD
29	W585-0126	END DOOR HEAT SHIELD
30	N010-0326	END DOOR COVER
31	W500-0192	END BRICK PANEL RETAINER
32	W475-0516	END BRICK PANEL
26	W335-0027	SHORT HOOD

COMPONENTS UNIQUE TO ISLAND UNIT		
REF	**PART NO.**	**DESCRIPTION**
27	W565-0060	SHORT CURTAIN MESH
28	W555-0039	SHORT CURTAIN ROD

BURNER COMPONENTS		
REF	**PART NO.**	**DESCRIPTION**
33	W010-2146	PAN BURNER
34	W475-0624	FIBRE BURNER COVER
35	W662-0001	NATURAL GAS OXYGEN DEPLETION SENSOR SYSTEM
35	W662-0005	PROPANE GAS OXYGEN DEPLETION SENSOR SYSTEM
36*	W660-0005	BURNER ON/OFF SWITCH
37*	W680-0004	THERMOPILE
38*	W357-0001	PIEZO IGNITER
39	W455-0072	#39 NATURAL GAS BURNER ORIFICE
39	W455-0059	#53 PROPANE GAS BURNER ORIFICE
40	W725-0030	NATURAL GAS VALVE
40	W725-0031	PROPANE GAS VALVE

ACCESSORIES		
REF	**PART NO.**	**DESCRIPTION**
41*	ELB40PB	END LOUVRE KIT - POLISHED BRASS
41*	ELB40AB	END LOUVRE KIT - ANTIQUE BRASS
41*	ELB40SS	END LOUVRE KIT - STAINLESS STEEL
41*	ELB40K	END LOUVRE KIT - BLACK
42	L36K	LOUVRE KIT - UPPER & LOWER - BLACK
42	L36PB	LOUVRE KIT - UPPER & LOWER - POLISHED BRASS
42	L36AB	LOUVRE KIT - UPPER & LOWER - ANTIQUE BRASS
42	L36SS	LOUVRE KIT - UPPER & LOWER - STAINLESS STEEL
43	HOIG-3	HERITAGE ORNAMENTAL INSET-GOLD PLATED
43	HOIKG-3	HERITAGE ORNAMENTAL INSET-BLACK GOLD PLATED
43	HOIBC-3	HERITAGE ORNAMENTAL INSET-BRUSHED COPPER PLATED
43	HOIBG -3	HERITAGE ORNAMENTAL INSET-BRUSHED GOLD PLATED
44*	EHOIG -2	END HERITAGE ORNAMENTAL INSET-GOLD PLATED
44*	EHOIKG-2	END HERITAGE ORNAMENTAL INSET-BLACK GOLD PLATED
44*	EHOIBC-2	END HERITAGE ORNAMENTAL INSET-BRUSHED COPPER PLATED
44*	EHOIBG -2	END HERITAGE ORNAMENTAL INSET - BRUSHED GOLD PLATED
45	DOIG-2	DIAMOND ORNAMENTAL INSET - GOLD PLATED
45	DOIKG-2	DIAMOND ORNAMENTAL INSET - BLACK GOLD PLATED
45	DOIBC-2	DIAMOND ORNAMENTAL INSET - BRUSHED COPPER PLATED
46	DOIBG-2	DIAMOND ORNAMENTAL INSET - BRUSHED GOLD PLATED

ACCESSORIES CONTINUED		
REF	**PART NO.**	**DESCRIPTION**
46*	EDOIG	END DIAMOND ORNAMENTAL INSET - GOLD PLATED
46*	EDOIKG	END DIAMOND ORNAMENTAL INSET - BLACK GOLD PLATED
46*	EDOIBC	END DIAMOND ORNAMENTAL INSET - BRUSHED COPPER PLATED
46*	EDOIBG	END DIAMOND ORNAMENTAL INSET - BRUSHED GOLD PLATED
47	GOIG-2	GOTHIC ORNAMENTAL INSET - GOLD PLATED
47	GOIKG-2	GOTHIC ORNAMENTAL INSET - BLACK GOLD PLATED
47	GOIBC-2	GOTHIC ORNAMENTAL INSET - BRUSHED COPPER PLATED
47	GOIBG-2	GOTHIC ORNAMENTAL INSET - BRUSHED GOLD PLATED
48*	EGOIG	END GOTHIC ORNAMENTAL INSET - GOLD PLATED
48*	EGOIKG	END GOTHIC ORNAMENTAL INSET - BLACK GOLD PLATED
48*	EGOIBC	END GOTHIC ORNAMENTAL INSET - BRUSHED COPPER PLATED
48*	EGOIBG	END GOTHIC ORNAMENTAL INSET - BRUSHED GOLD PLATED
49	SOIG-2	SEASHELL ORNAMENTAL INSET - GOLD PLATED
49	SOIKG-2	SEASHELL ORNAMENTAL INSET - BLACK GOLD PLATED
49	SOIBC-2	SEASHELL ORNAMENTAL INSET - BRUSHED COPPER PLATED
49	SOIBG-2	SEASHELL ORNAMENTAL INSET - BRUSHED GOLD PLATED
50*	ESOIG	END SEASHELL ORNAMENTAL INSET - GOLD PLATED
50*	ESOIKG	END SEASHELL ORNAMENTAL INSET - BLACK GOLD PLATED
50*	ESOIBC	END SEASHELL ORNAMENTAL INSET - BRUSHED COPPER PLATED
50*	ESOIBG	END SEASHELL ORNAMENTAL INSET - BRUSHED GOLD PLATED
51	EOIG-2	ECLIPSE ORNAMENTAL INSET - GOLD PLATED
51	EOIKG-2	ECLIPSE ORNAMENTAL INSET - BLACK GOLD PLATED
51	EOIBC-2	ECLIPSE ORNAMENTAL INSET - BRUSHED COPPER PLATED
51	EOIBG-2	ECLIPSE ORNAMENTAL INSET - BRUSHED GOLD PLATED
52*	EEOIG	END ECLIPSE ORNAMENTAL INSET - GOLD PLATED
52*	EEOIKG	END ECLIPSE ORNAMENTAL INSET - BLACK GOLD PLATED
52*	EEOIBC	END ECLIPSE ORNAMENTAL INSET - BRUSHED COPPER PLATED
52*	EEOIBG	END ECLIPSE ORNAMENTAL INSET - BRUSHED GOLD PLATED

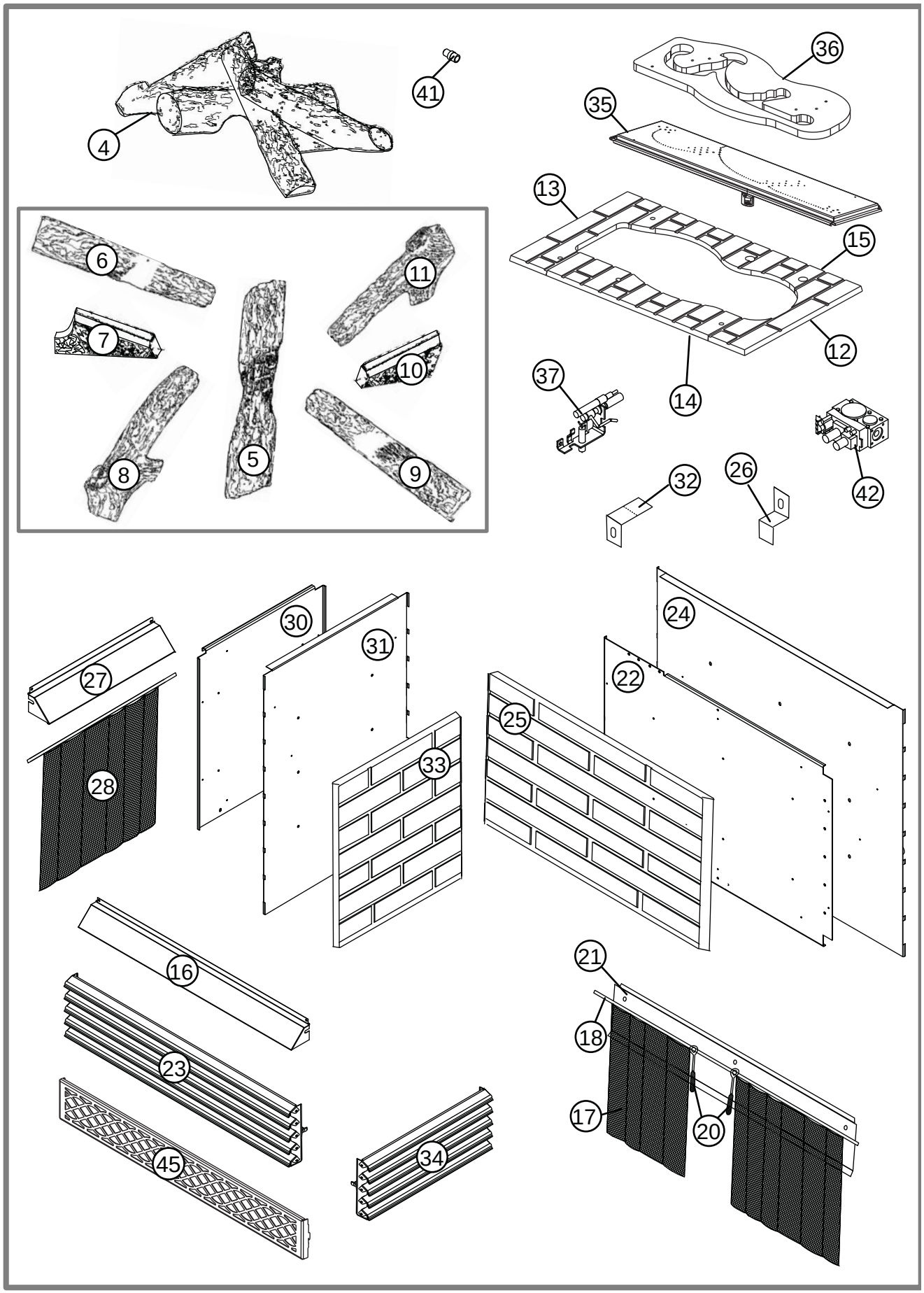
4
41
36
35
13
15
12
14
6
11
7
10
8
5
9
37
42
32
26
30
31
27
24
22
25
28
33
16
21
18
23
17
20
45
34

14.0 TROUBLE SHOOTING GUIDE

⚠ WARNING

ALWAYS LIGHT THE PILOT WHETHER FOR THE FIRST TIME OR IF THE GAS SUPPLY HAS RAN OUT, WITH THE GLASS DOOR OPEN OR REMOVED.

TURN OFF THE GAS AND ELECTRICAL POWER BEFORE SERVICING THE APPLIANCE.

APPLIANCE MAY BE HOT, DO NOT SERVICE UNTIL APPLIANCE HAS COOLED.

DO NOT USE ABRASIVE CLEANERS.

SYMPTOM	PROBLEM	TEST SOLUTION
Main burner goes out; pilot stays on.	Pilot flame is not large enough or not engulfing the thermopile.	- Ensure adequate supply pressure. - Replace pilot assembly.
	Thermopile shorting / loose connection.	- Clean thermopile connection to the valve. Reconnect. - Replace thermopile / valve.
	Remote wall switch wire is too long; too much resistance in the system.	- Shorten wire to connect length or wire gauge.
	Faulty thermostat or switch.	- Replace.
Main burner goes out; pilot goes out.	Insufficient air supply.	- Open window or door. (Use one of the methods described in ANSI Z223.1 Section 5.3 or the applicable local code.) - Have room checked for adequate air exchange. - See “COMBUSTION AND VENTILATION AIR PROVISIONS” section to ensure adequate air supply.
	Out of propane gas.	- Fill the tank.
	Pilot flame is not large enough. (Supply pressure too low.)	- Service or replace Oxygen Depletion Sensor System. - Correct piping and / or regulator to provide correct pressure. - Ensure adequate supply pressure.
Pilot goes out when the gas knob is released. The gas valve has an interlock device which will not allow the pilot burner to be lit until the thermocouple has cooled. Allow approximately 60 seconds for the thermocouple to cool.	System is not correctly purged.	- Purge the gas line.
	Out of propane gas.	- Fill the tank.
	Pilot flame is not large enough. (Supply pressure too low.)	- Service or replace Oxygen Depletion Sensor System.
	Thermocouple shorting / faulty.	- Loosen and tighten thermocouple. - Clean thermocouple and valve connection. - Replace Oxygen Depletion Sensor System. - Test and replace valve.
	Faulty valve / high low knob does not depress smoothly.	- Replace.

42.4_A

SYMPTOM	PROBLEM	TEST SOLUTION
Pilot burning; no gas to main burner; gas knob is on 'HI'; wall switch / thermostat is on.	Thermostat or switch is defective.	- Connect a jumper wire across the wall switch terminals; if main burner lights, replace switch / thermostat.
	Wall switch wiring is defective.	- Disconnect wires from valve. Connect a jumper wire across terminals 1 & 3; if the main burner lights, check the wires for defects and / or replace wires.
	Main burner orifice is plugged.	- Remove stoppage in orifice.
	Faulty valve.	- Replace.
Pilot will not light.	Out of propane gas.	- Fill the tank.
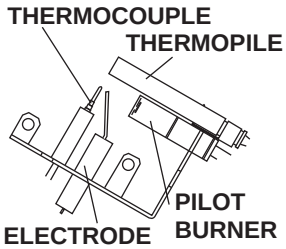	No spark at pilot burner.	- Check if pilot can be lit by a match. - Check that the wire is connected to the push button ignitor. - Check if the push button ignitor needs tightening. - Replace the wire if the wire insulation is broken or frayed. - Replace the electrode if the ceramic insulator is cracked or broken. - Replace the push button ignitor.
	No gas at the pilot burner.	- Check that the manual valve is turned on. - Check the pilot orifice for blockage. - Replace the valve / Oxygen Depletion Sensor System. - Call the gas distributor.
Pilot goes out while standing; Main burner is in 'OFF' position.	Gas piping is undersized.	- Turn on all gas appliances and see if pilot flame flutters, diminishes or extinguishes, especially when main burner ignites. Monitor appliance supply working pressure. - Check if supply piping size is to code. Correct all undersized piping.
	Pilot flame is not large enough.	- ODS Burner requires checking.
Main burner will not light; or is slow to light, noisy pilot.	Inlet pressure too high.	- Adjust inlet pressure to ensure maximum 7.0" W.C. at gas valve for natural gas and 13.0" W.C. for propane.
	Pilot flame blowing off, missing thermopile.	
Carbon is being deposited on glass, logs, rocks, media or combustion chamber.	Air shutter has become blocked.	- Ensure air shutter opening is free of lint or other obstructions.
	Flame is impinging on the glass, logs, rocks, media or combustion chamber.	- Check that the logs are correctly positioned. - Check for ceiling or oscillating fans that may be influencing the flame. - Open air shutter to increase the primary air. See "VENTURI ADJUSTMENT" section. - Check the input rate: check the manifold pressure and orifice size as specified by the rating plate.

42.4_2_A

SYMPTOM	PROBLEM	TEST SOLUTION
Flames are consistently too large or too small. Carboning occurs. 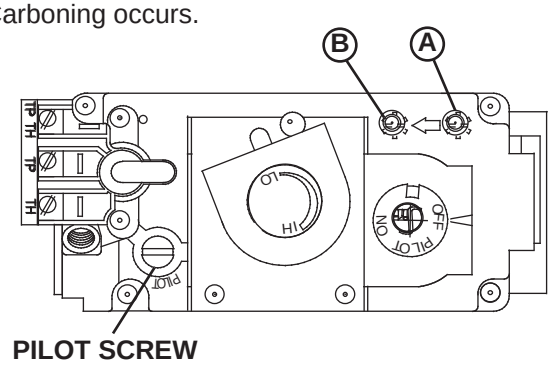	Unit is over-fired or under-fired.	- Check pressure readings: - Inlet pressure can be checked by turning screw (A) counter-clockwise 2 or 3 turns and then placing pressure gauge tubing over the test point. Check with burner operating on “HI”. Gauge should read 7” (minimum 4.5”) water column for natural gas or 13” (11” minimum) water column for propane. - Outlet pressure can be checked the same as above using screw (B). Check with burner operating on “HI”. Gauge should read 3.5” water column for natural gas or 10” water column for propane. - **AFTER TAKING PRESSURE READINGS, BE SURE TO TURN SCREWS CLOCKWISE FIRMLY TO RESEAL. DO NOT OVER TORQUE.** - Leak test with a soap and water solution.
	Air shutter improperly adjusted.	- Return air shutter to specified opening, see “VENTURI ADJUSTMENT” section.
Exhaust fumes smelled in room, headaches.	Not enough combustion air.	- Increase fresh air supply. (Use one of the methods described in ANSI Z223.1 Section 5.3 or the applicable local code.)
	Not enough ventilation air.	- Increase fresh air supply. (Use one of the methods described in ANSI Z223.1 Section 5.3 or the applicable local code.)
	Flame is impinging on the logs or combustion chamber.	- Check that the logs are correctly positioned. - Open air shutter to increase the primary air. See “VENTURI ADJUSTMENT” section. - Check the input rate: check the manifold pressure and orifice size as specified by the rating plate values.
Remote wall switch is in “off” position; main burner comes on when gas knob is turned to “ON” position.	Wall switch is mounted upside down.	- Reverse.
	Remote wall switch is grounding.	- Replace.
	Remote wall switch wire is grounding.	- Check for ground (short); repair ground or replace wire.
	Faulty valve.	- Replace.
If optional catalytic door is used, White / grey film forms on the glass.	Sulphur from fuel is being deposited on the glass, logs, rocks, media or combustion surfaces.	- Clean glass with recommended gas appliance glass cleaner. **DO NOT CLEAN GLASS WHEN HOT!** - If deposits are not cleaned off regularly, the glass may become permanently market.

42.4_3_A

15.0 WARRANTY

NAPOLEON® products are manufactured under the strict Standard of the world recognized ISO 9001 : 2008 Quality Assurance Certificate.
NAPOLEON® products are designed with superior components and materials assembled by trained craftsmen who take great pride in their work. The burner and valve assembly are leak and test-fired at a quality test station. The complete heater is again thoroughly inspected by a qualified technician before packaging to ensure that you, the customer, receives the quality product that you expect from NAPOLEON®.

NAPOLEON® GAS FIREPLACE PRESIDENT'S LIFETIME LIMITED WARRANTY

The following materials and workmanship in your new NAPOLEON® gas heater are warranted against defects for as long as you own the heater. This covers: combustion chamber, heat exchanger, stainless steel burner, phazer™ logs and embers, rocks, ceramic glass (thermal breakage only), gold plated parts against tarnishing, porcelainized enameled components and aluminum extrusion trims.*
Electrical (110V and millivolt) components and wearable parts such as blowers, gas valves, thermal switch, switches, wiring, remote controls, ignitor, gasketing, and pilot assembly are covered and NAPOLEON® will provide replacement parts free of charge during the first year of the limited warranty.*
Labour related to warranty repair is covered free of charge during the first year. Repair work, however, requires the prior approval of an authorized company official. Labour costs to the account of NAPOLEON® are based on a predetermined rate schedule and any repair work must be done through an authorized NAPOLEON® dealer.
* Construction of models vary. Warranty applies only to components included with your specific heater.

CONDITIONS AND LIMITATIONS

NAPOLEON® warrants its products against manufacturing defects to the original purchaser only. Registering your warranty is not necessary. Simply provide your proof of purchase along with the model and serial number to make a warranty claim. NAPOLEON® reserves the right to have its representative inspect any product or part thereof prior to honouring any warranty claim. Provided that the purchase was made through an authorized NAPOLEON® dealer your heater is subject to the following conditions and limitations:

This factory warranty is non-transferable and may not be extended whatsoever by any of our representatives.

The gas heater must be installed by a licensed, authorized service technician or contractor. Installation must be done in accordance with the installation instructions included with the product and all local and national building and fire codes. This limited warranty does not cover damages caused by misuse, lack of maintenance, accident, alterations, abuse or neglect and parts installed from other manufacturers will nullify this warranty.

This limited warranty further does not cover any scratches, dents, corrosion or discoloring caused by excessive heat, abrasive and chemical cleaners nor chipping on porcelain enamel parts, mechanical breakage of PHAZER™ logs and embers.

NAPOLEON® warrants its stainless steel burners against defects in workmanship and material for life, subject to the following conditions: During the first 10 years NAPOLEON® will replace or repair the defective parts at our option free of charge. From 10 years to life, NAPOLEON® will provide replacement burners at 50% of the current retail price.

In the first year only, this warranty extends to the repair or replacement of warranted parts which are defective in material or workmanship provided that the product has been operated in accordance with the operation instructions and under normal conditions.

After the first year, with respect to this President's Lifetime Limited Warranty, NAPOLEON® may, at its discretion, fully discharge all obligations with respect to this warranty by refunding to the original warranted purchaser the wholesale price of any warranted but defective part(s).

NAPOLEON® will not be responsible for installation, labour or any other expenses related to the reinstallation of a warranted part and such expenses are not covered by this warranty.

Notwithstanding any provisions contained in the President's Lifetime Limited Warranty, NAPOLEON'S responsibility under this warranty is defined as above and it shall not in any event extend to any incidental, consequential or indirect damages.

This warranty defines the obligations and liability of NAPOLEON® with respect to the NAPOLEON® gas heater and any other warranties expressed or implied with respect to this product, its components or accessories are excluded.

NAPOLEON® neither assumes, nor authorizes any third party to assume, on its behalf, any other liabilities with respect to the sale of this product.

NAPOLEON® will not be responsible for: over-firing, downdrafts, spillage caused by environmental conditions such as rooftops, buildings, nearby trees, hills, mountains, inadequate vents or ventilation, excessive venting configurations, insufficient makeup air, or negative air pressures which may or may not be caused by mechanical systems such as exhaust fans, furnaces, clothes dryers, etc.

Any damages to heater, combustion chamber, heat exchanger, brass trim or other components due to water, weather damage, long periods of dampness, condensation, damaging chemicals or cleaners will not be the responsibility of NAPOLEON®.

16.0 SERVICE HISTORY

Appliance Service History

This heater must be serviced annually depending on usage.

Date	Dealer Name	Service Technician Name	Service Performed	Special Concerns

43.1

17.0 NOTES

44.1