MOEN

Buy it for looks. Buy it for life.®

Specifications

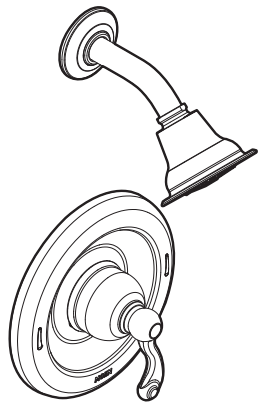

Single-Handle Shower Valve

Model: 82006CBN
82006BRB

DESCRIPTION
- Metal construction with various finishes identified by suffix
- Pressure balancing cycle valve design with an adjustable temperature limit stop
- 1/2" IPS connections
- Includes valve, showerhead, arm and flange

OPERATION
- Lever style handle
- Handle operates counterclockwise through a 270˚arc with off at 6 o'clock and maximum hot at the 9 o'clock position. Shut off in clockwise direction
- Adjustable temperature limit stop to control maximum hot water temperature
- Pressure balancing mechanism maintains selected discharge temperature to ± 2°

FLOW
- Showerhead is limited to 2.5 gpm (9.5 L/min)

CARTRIDGE
- 1222 cartridge design
- Nonmetallic/nonferrous and stainless steel materials
- Accommodates back to back installations

STANDARDS
- Third party certified to meet: ASME A112.18.1/CSA B-125.1 and all applicable requirements referenced therein
- **ADA** for lever handle

WARRANTY
- Lifetime limited warranty against leaks, drips and finish defects to the original consumer purchaser
- 5 year warranty if used in commercial installations

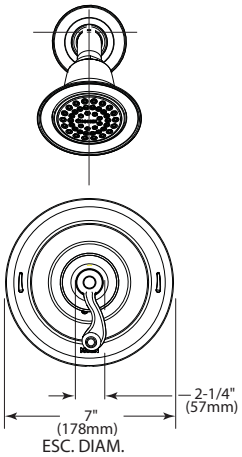

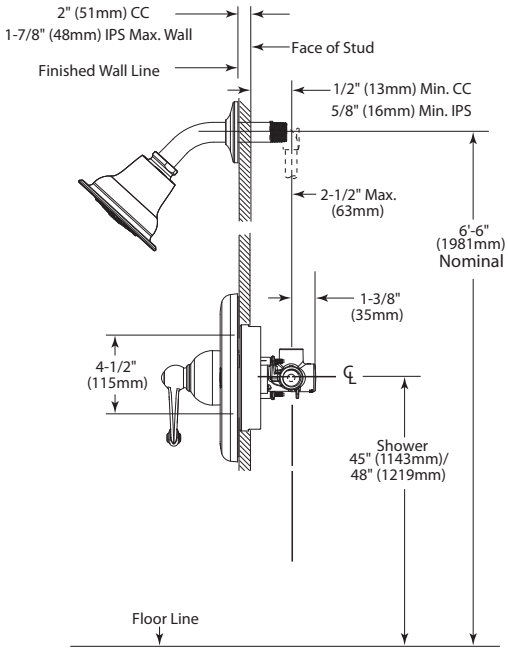

THICK WALL INSTALLATION

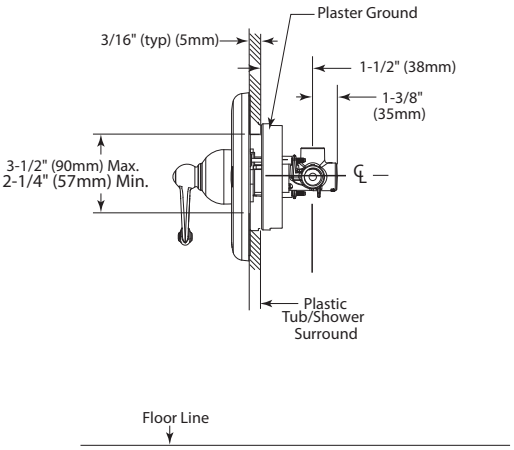

THIN WALL INSTALLATION

CRITICAL DIMENSIONS

(DO NOT SCALE)

Rev. 6/11

FOR MORE INFORMATION CALL: 1-800-BUY-MOEN
www.moen.com

11/02/2011 SPC11196 500000114227
Release04.04