MISENO

TAKE ME HOME

6-12″ Two handle widespread lavatory faucet

Finish : MNO641-CP (polished chrome)
Finish : MNO641-BN (brushed nickel)
Finish : MNO641-ORB (oil rubbed bronze)

Features

- Lead free brass body
- Ceramic cartridge
- Quick Connect structure
- 1.2gpm WaterSense Aerator
- With Brass Push Up Drain

Codes and Standards

Specified model meets or exceeds:

- NSF 61 - 9
- ASME A112.18.1 M/A 112.18.1
- NSF/ANSI 372
- ADA
- Watersense

Installation Notes

- Cover your drain to avoid losing parts.
- The fittings should be installed by the licensed plumber of the state.
- When installing flexible hose, please note: there should be no torsion or deformation ; do not fold into Shape V or L; do not use if there is any crack or deformation.

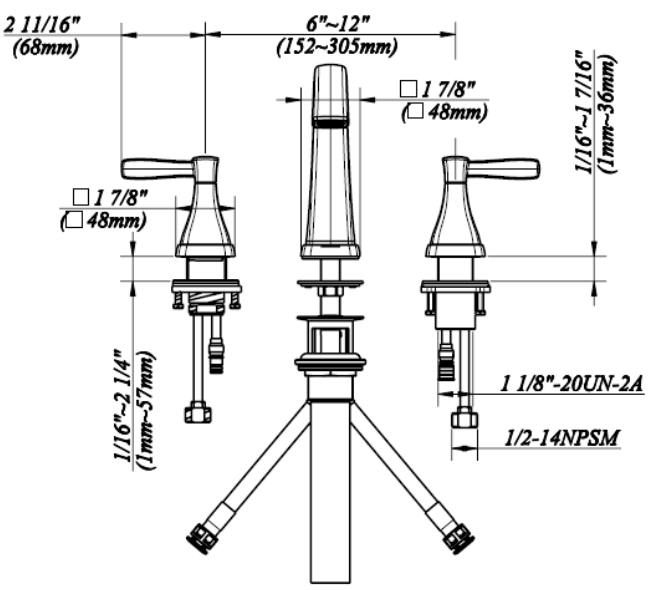

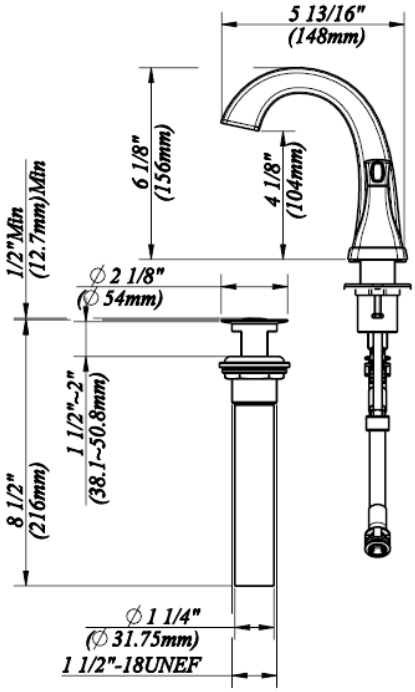

Miseno warranty. See complete warranty statement for details.
Miseno reserves the right to make specification changes without notice or obligation

For additional assistance or service call: 1-855-480-2915 or visit our website www.miseno.com