MISENO

TAKE ME HOME

6-12″ Two handle widespread lavatory faucet

Finish : MNO781-CP (polished chrome)
Finish : MNO781-BN (brushed nickel)
Finish : MNO781-ORB (oil rubbed bronze)

Features

- Lead free brass body
- Ceramic cartridge
- Quick Connect structure
- 1.2gpm WaterSense Aerator
- With Brass Push Up Drain

Codes and Standards

Specified model meets or exceeds:

- NSF 61 - 9
- ASME A112.18.1 M/A 112.18.1
- NSF/ANSI 372
- ADA
- Watersense

Installation Notes

- Cover your drain to avoid losing parts.
- The fittings should be installed by the licensed plumber of the state.
- When installing flexible hose, please note: there should be no torsion or deformation ; do not fold into Shape V or L; do not use if there is any crack or deformation.

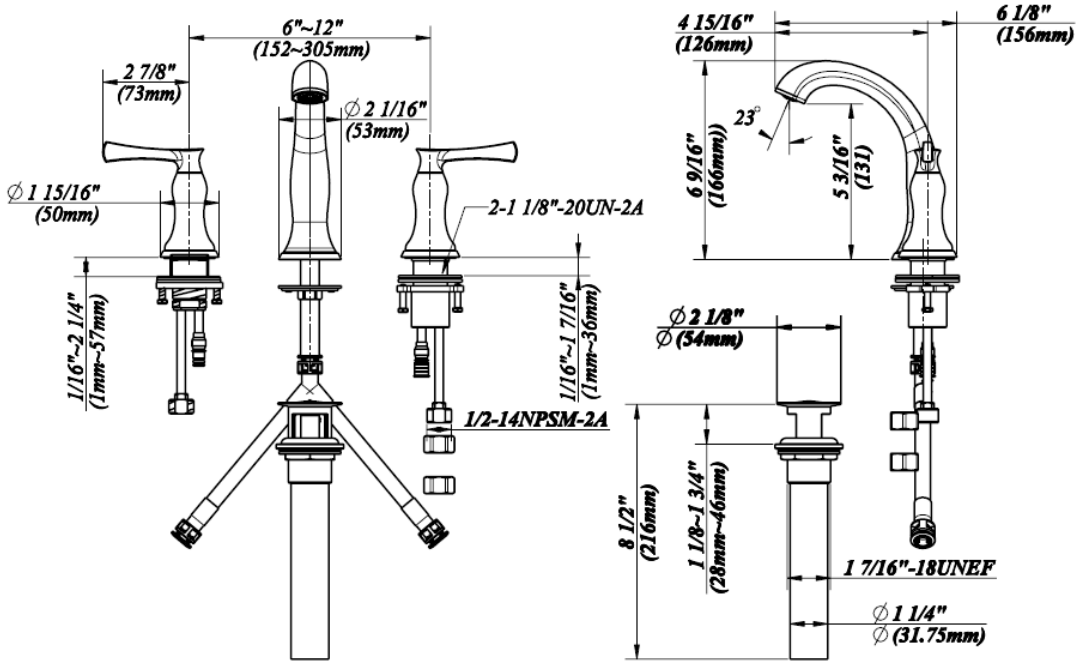

Miseno warranty. See complete warranty statement for details.
Miseno reserves the right to make specification changes without notice or obligation