Item: FW0B0005(FG)

Date	2015.09.10	REV (IPL)	A	REV (BOM)	1	REV	1

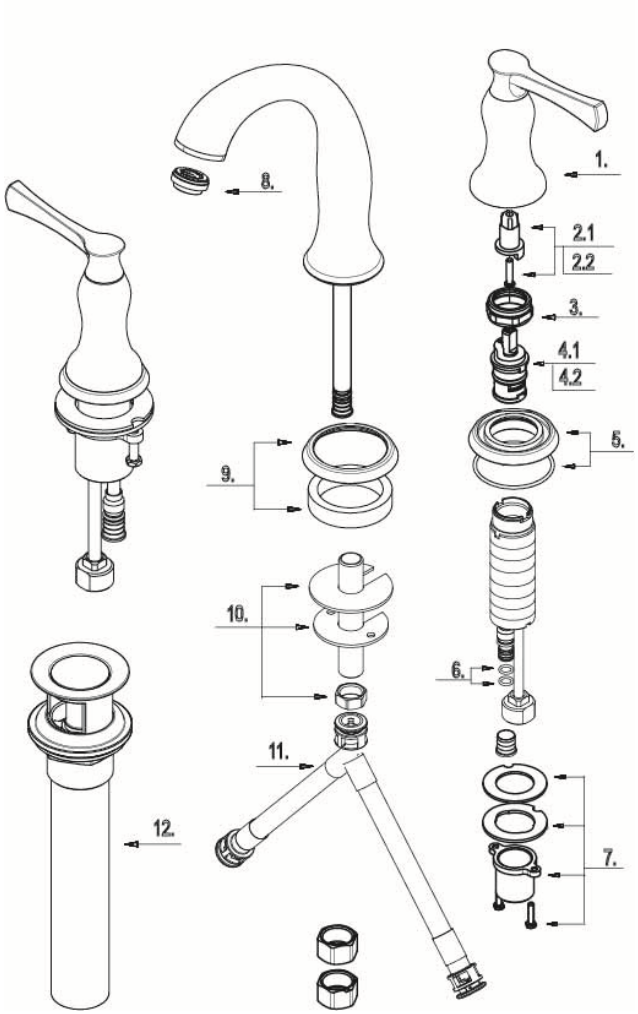

No.	Part Name	Part No.
1⊙.	Metal Handle Assembly	A662872
2.1	Handle Extension Assembly-Cold	A66G378C
2.2	Handle Extension Assembly-Hot	A66G378H
3	Retainer Nut	A016022
4.1	Ceramic Disc Cartridge - Cold	A507104N
4.2	Ceramic Disc Cartridge - Hot	A507103N
5⊙.	Handle Trim Ring	A66D124
6	O-Ring Set	A668178N
7	Mounting Hardware	A66D656-P
8	Aerator 1.2gpm	A553055N
9⊙.	Spout Trim Ring	A667387
10	Mounting Hardware	A66D455
11	Supply Hose	A135141N
12⊙.	Pop-up Assembly	A505918