New Age LED | 88354CLTE

Job Name:_____ Job Type:_____ Quantity:_____ Comments:_____

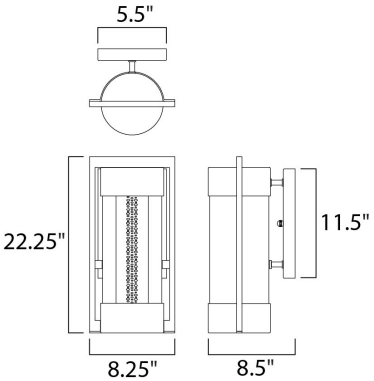

Measurements:

Height	Width	Extension
22.25''	8.25''	8.50''
BP Height	BP Width	HCO
11.50''	5.50''	6.50''
Hanging Weight		
8.14 lb		

Lamping:

LED LED	480 Rated Lumens
1.00 10W LED	3500 Color Temperature
10 total watt	50,000 Rated Life 80+ CRI
Dimmable : No	

Shipping:

Carton Weight	Carton Width	Carton Height	Carton Length
11.44 lb	18.11''	10.83''	26.77''
Master Pack Qty	UPC	UPS	
1.0000	783209087842	Yes	

Finish:

Texture Ebony TE

Glass:

Clear CL

Material:

Die Cast Aluminum

Certification:

Wet Location
N Location
ADA

Additional:

LED (Included)
Flourescent Watts: 9.6
Incandescent Watts: 43.64