Installation Instructions

Kraus Kitchen Sink Strainer
ST-4

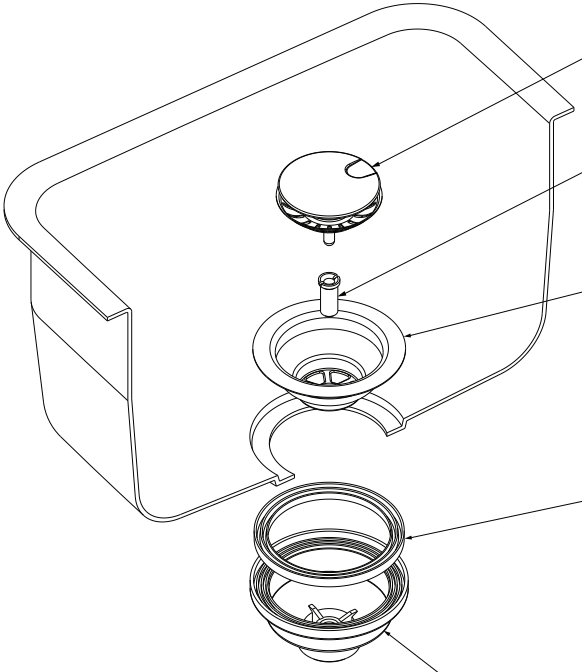

1. **Pull knob & basket assembly**
   Step 1: Remove the pull knob and basket assembly

2. **Main connecting screw**
   Step 2: Disassemble the outlet by removing the main connecting screw (screw will be reinstalled in Step 5)

3. **Stainless steel outlet top**
   Step 3: Separate the parts and place the stainless steel outlet top and center it in the 90mm sink hole from above

   Note: Seal between underside of strainer body flange and inside of sink with plumber's putty (not included)

4. **Large rubber washer**
   Step 4: Fit the large washer inside the top rim of the plastic underbody and center it on the sink hole from underneath

   Step 5: Fit the main connecting screw from above and tighten

   Step 6: Replace the pull knob and basket assembly and test for leaks

   Step 7: Connect to waste plumbing according to relevant plumbing regulations
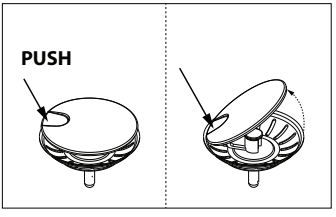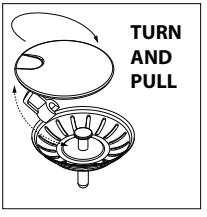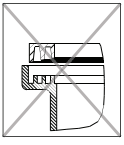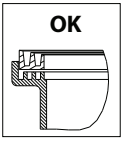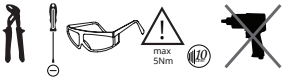
5. **Plastic underbody**